7214 Foxvista Lane

Lot 47, in Block 4, of Foxwood Sec. 9, a Subdivision in Harris County, Texas, according to map or plat thereof recorded in Film Code No. 557298, of the Map and/or Plat Records, Harris County, Texas.

Orchard TITLE

LEGEND

- 1/2" ROD FOUND
- 1/2" ROD SET
- 1" PIPE FOUND
- "X" FOUND/SET
- 5/8" ROD FOUND
- POINT FOR CORNER
- FENCE POST FOR CORNER
- CM CONTROLLING MONUMENT
- AC AIR CONDITIONER
- PE POOL EQUIPMENT
- TE TRANSFORMER PAD
- COLUMN
- POWER POLE
- UNDERGROUND ELECTRIC
- OVERHEAD ELECTRIC
- TELE TELEPHONE PEDESTAL
- BL BUILDING LINE
- AE AERIAL EASEMENT
- SSE SANITARY SEWER EASEMENT
- GM GAS METER
- WM WATER METER
- LP LIGHT POLE
- UE UTILITY EASEMENT
- OHP OVERHEAD ELECTRIC POWER
- OES OVERHEAD ELECTRIC SERVICE
- CHAIN LINK
- WOOD FENCE 0.5' WIDE TYPICAL
- IRON FENCE
- BARBED WIRE
- DOUBLE SIDED WOOD FENCE
- EDGE OF ASPHALT
- EDGE OF GRAVEL
- CONCRETE
- COVERED AREA
- BRICK
- STONE

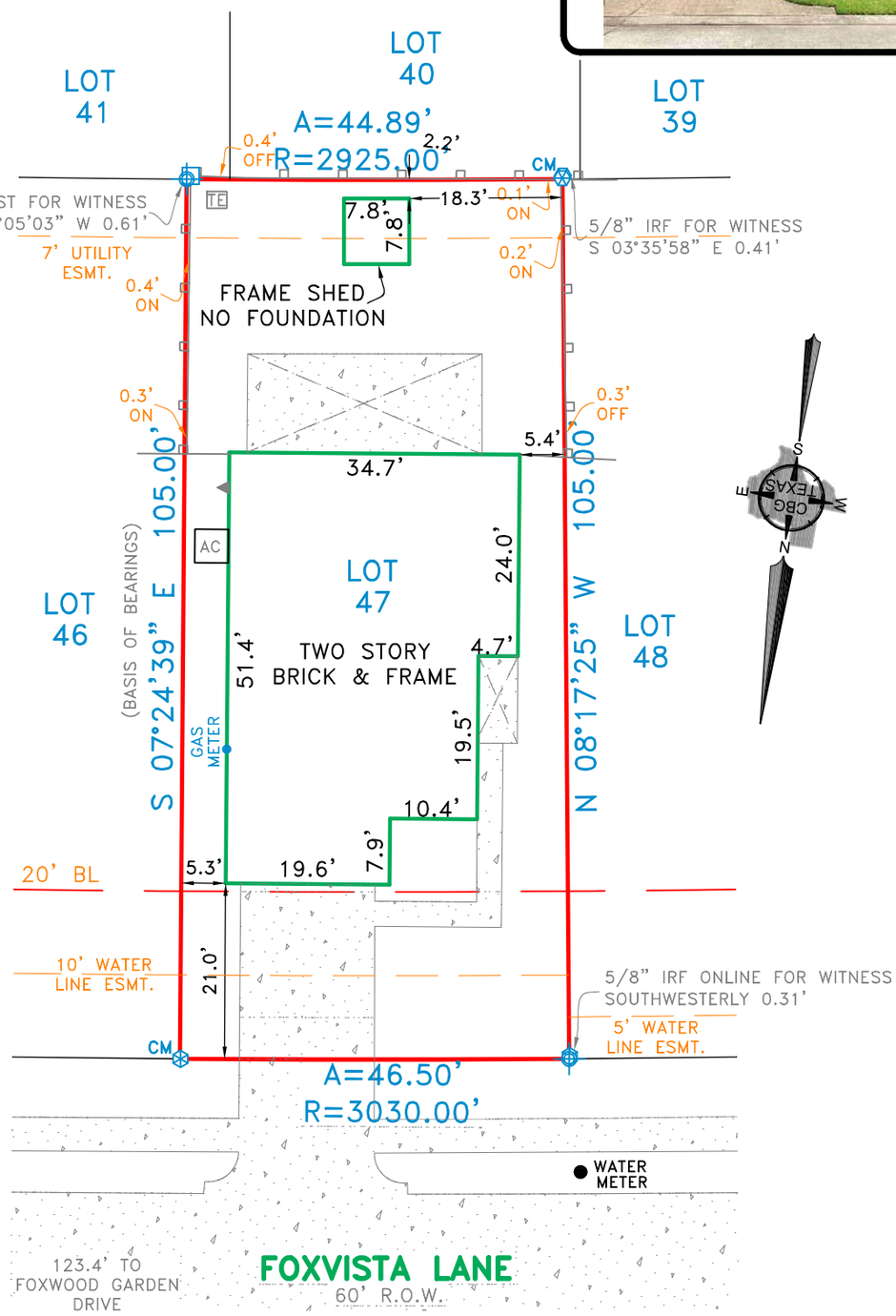

EXCEPTIONS:

NOTE: PROPERTY SUBJECT TO TERMS, CONDITIONS, AND EASEMENTS CONTAINED IN INSTRUMENTS RECORDED IN: CF. NO(S). 557298, V630637, X748248, X748245, 20090503069, 20090503070, 20100370186, 20110542325, 20110542326, 20140168498, 20140202783, 20140202784

SUBJECT PROPERTY LIES WITHIN THE AREA DESIGNATED AND ZONED BY THE CITY OF HOUSTON AS THE "JETERO AIRPORT SITE" (HOUSTON INTERCONTINENTAL AIRPORT) AND IS SUBJECT TO THE RESTRICTIONS AND EGULATIONS IMPOSED BY ORDINANCE OF THE CITY OF HOUSTON, A CERTIFIED COPY OF WHICH IS RECORDED IN VOLUME 4184, PAGE 518 AND BY AMENDMENTS THERETO, CERTIFIED COPIES OF WHICH ARE RECORDED IN VOLUME 4897, PAGE 67 AND VOLUME 5448, PAGE 421, ALL OF THE DEED RECORDS OF HARRIS COUNTY, TEXAS, AND FILED FOR RECORD UNDER HARRIS COUNTY CLERK'S FILE NO(S). J040968 AND 20080598601.

Accepted by: _____
Purchaser

Date: _____

_____
Purchaser

NOTES:

NOTE: BEARINGS, EASEMENTS AND BUILDING LINES ARE BY RECORDED PLAT UNLESS OTHERWISE NOTED.

FLOOD NOTE: According to the F.I.R.M. No. 48201C0290N, this property does lie in Zone X and DOES NOT lie within the 100 year flood zone.

This survey is made in conjunction with the information provided by Orchard Title of Texas. Use of this survey by any other parties and/or for other purposes shall be at user's own risk and any loss resulting from other use shall not be the responsibility of the undersigned. This is to certify that I have on this date made a careful and accurate survey on the ground of the subject property. The plat hereon is a correct and accurate representation of the property lines and dimensions are as indicated; location and type of buildings are as shown; and EXCEPT AS SHOWN, there are no visible and apparent encroachments or protrusions on the ground.

Drawn By: ML/RPK

Scale: 1" = 20'

Date: 07-20-2021

GF No.: TX-06-202103118

Job No. 2115501

CBG SURVEYING TEXAS LLC
PROFESSIONAL LAND SURVEYORS
DFW · Houston · East Texas · Austin · San Antonio
12025 Shiloh Road, Ste. 240
Dallas, TX 75228
P 214.349.9485
F 214.349.2216
Firm No. 10168800
www.cbgtxllc.com

STATE OF TEXAS REGISTERED MICHAEL CHURCHWELL 6384 PROFESSIONAL LAND SURVEYOR

MICHAEL CHURCHWELL
R.P.L.S. NO. 6384