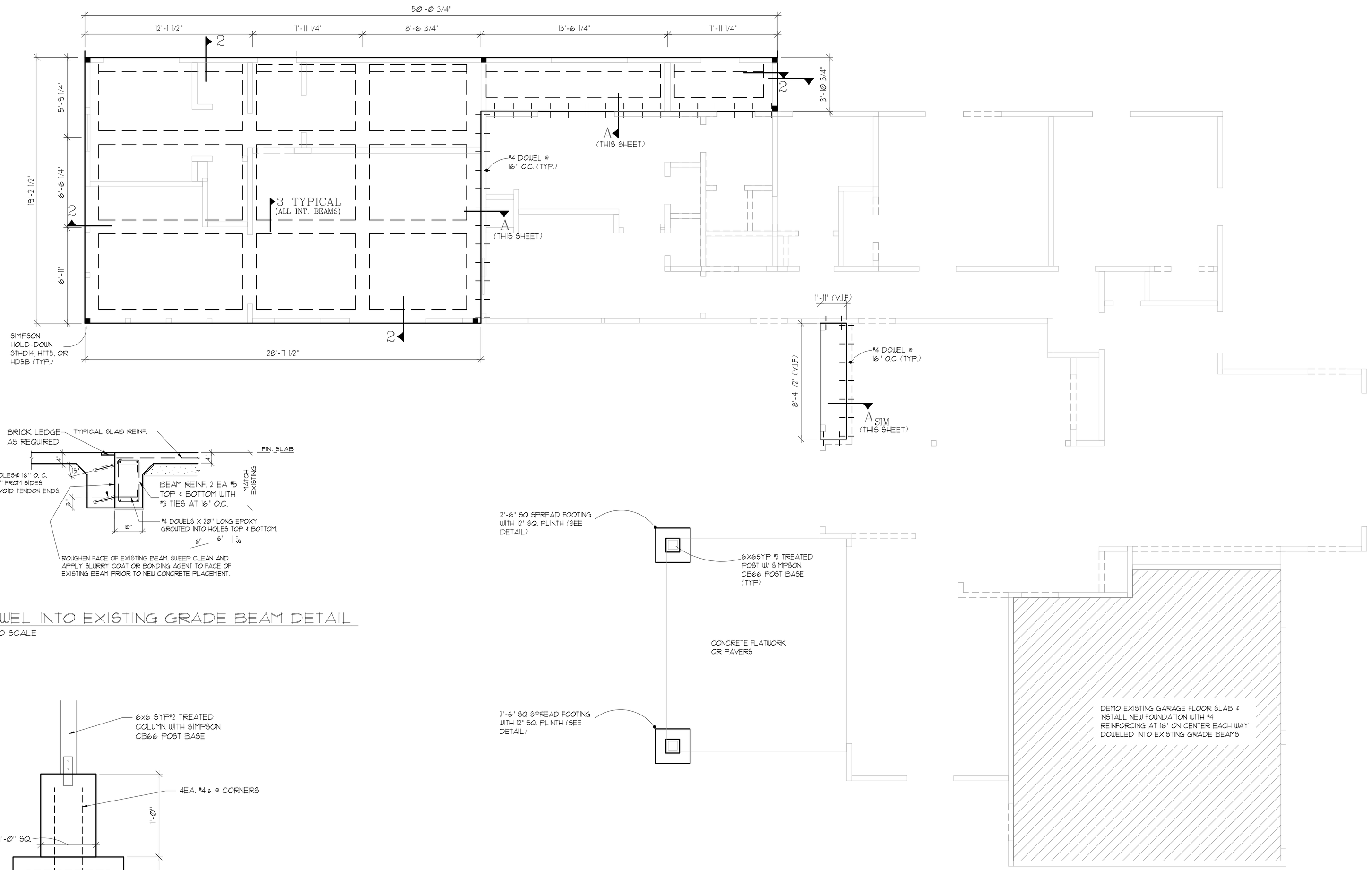

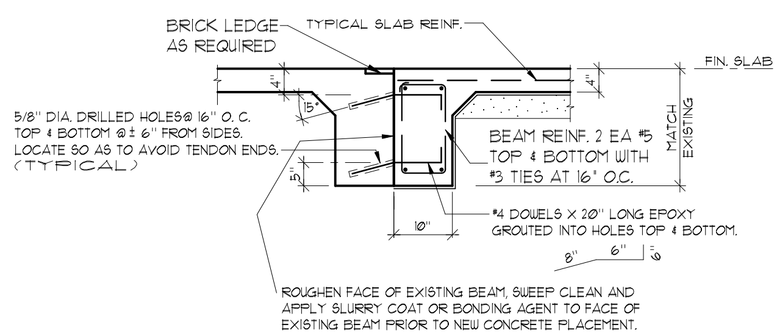

A/S1 DOWEL INTO EXISTING GRADE BEAM DETAIL
NOT TO SCALE

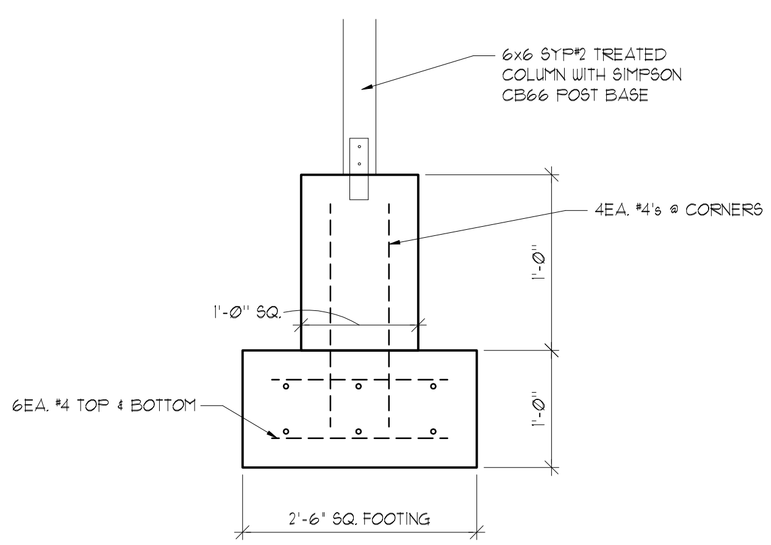

B/S1 SPREAD FOOTING DETAIL
NOT TO SCALE

FOUNDATION PLAN

SCALE 1/4" = 1'-0" ON 22X34 SHEET
SCALE 1/8" = 1'-0" ON 11X17 SHEET

FOUNDATION NOTES:

1.) BUILDER MUST VERIFY ALL RAISE, DROPS, INSERTS, AND BLOCKOUTS & INSURE DIMENSIONS AGREE WITH ARCHITECTURAL PLANS AND SPECIFICATIONS.
2.) AN UNDERLAYMENT OR EQUIVALENT MATERIAL SHOULD BE PLACED AT CERAMIC, BRICK OR CLAY TILE AREAS TO PREVENT DIRECT BONDING OF FLOOR COVERING TO CONCRETE SLAB. A6x6xW2.9xW2.9 WWF IS RECOMMENDED AT ALL PORCHES AND AT CERAMIC, BRICK OR CLAY TILE AREAS FOR CRACK CONTROL.
3.) DUE TO DIMENSIONAL DISCREPANCIES AND/OR OMISSIONS IN ARCHITECTURAL DRAWINGS, SOME DIMENSIONS MAY NOT AGREE WITH FLOOR PLAN. BUILDER SHALL BE RESPONSIBLE FOR FINAL VERIFICATION OF ALL SLAB DIMENSIONS. IF IT IS DETERMINED THAT ANY DIMENSIONS ON THIS FOUNDATION DO NOT CONFORM WITH THE ARCHITECTURAL PLAN, THEN BEC-LIN SHOULD BE NOTIFIED AND ALLOWED TO REVIEW THE DRAWING AND MAKE REVISIONS AS REQUIRED.
4.) REFER TO DETAIL SHEET FOR CLIENT/HOMEOWNER MAINTENANCE RESPONSIBILITIES.
5.) REFER TO DETAIL SHEET FOR ACI REQUIREMENTS FOR BRICK VENEER EXPANSION CONTROL JOINTS.
6.) SEE SHEET S4 FOR FOUNDATION DETAILS
7.) ■ = HOLD DOWN SIMPSON STHD14, HTT5 OR HD5B OR EQUIVALENT SEE DETAILS.

THIS DRAWING IS THE PROPERTY OF BEC ENGINEERS AND CONSULTANTS REG # F-18690 AND MAY NOT BE REPRODUCED OR USED WITHOUT WRITTEN PERMISSION. ANY UNAUTHORIZED ALTERATION WILL VOID RESPONSIBILITY BY BEC, ITS EMPLOYEES AND REPRESENTATIVES.

FOR REVIEW
THIS DOCUMENT IS RELEASED FOR THE PURPOSE OF PRELIMINARY REVIEW UNDER THE AUTHORITY OF KARL BRECKON, P.E. 73425 IT IS NOT TO BE USED FOR CONSTRUCTION PURPOSES.
DATE: 7/10/17

NO.	REVISION	DATE
A	ISSUED FOR REVIEW	7-10-17
B	REVISED PER UPDATED ARCHITECTURAL PLANS 7-17	7-17-17

BEC ENGINEERS AND CONSULTANTS, LLC
3200 Wilcrest Dr., Suite 440
Houston, Texas 77042
Ph: 832-240-3771
Fax: 832-240-2724
TBPE REGIS. #: F-18690

DRN: DW | CHKD.: RS | DES.: KB
REF. NO. 17-1259

JESUS PACECHO
3006 BROADMEAD
HOUSTON, TX 77025
FOUNDATION PLAN

PLAN NO. S-1

DocuSign Envelope ID: F70BFD89-70CC-45F9-BE6D-B9981EC1A8C3

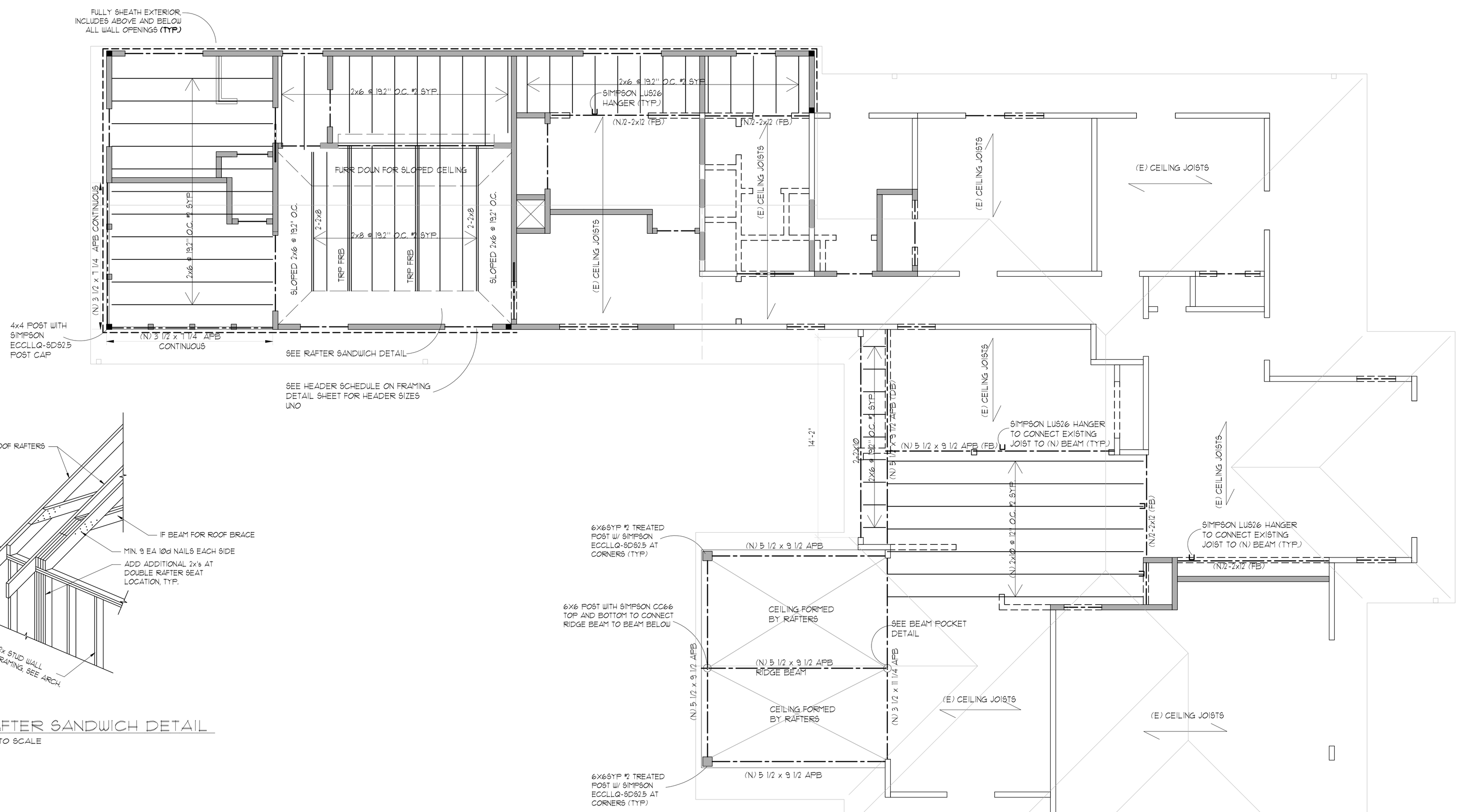

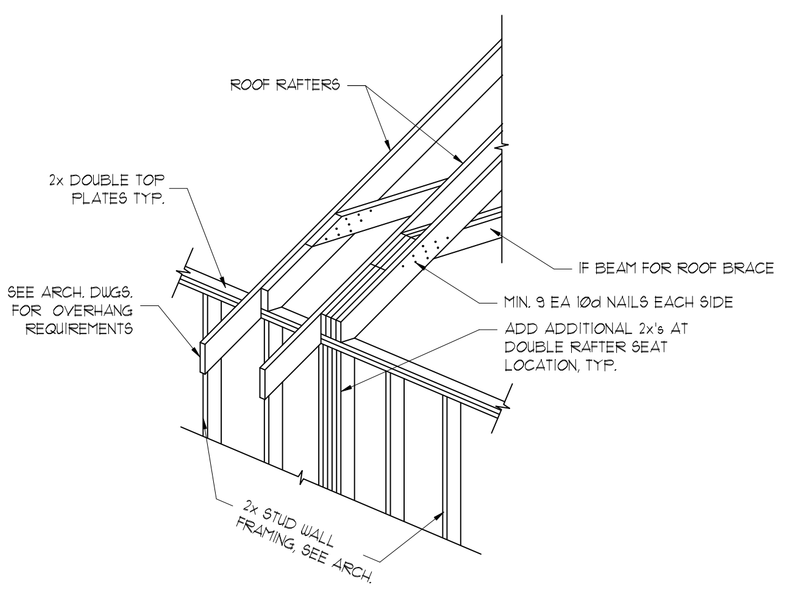

1 / S3 RAFTER SANDWICH DETAIL
NOT TO SCALE

FIRST LEVEL NOTES:

1.) ALL ROOF LEVEL CEILING JOISTS ARE TO BE 2 X 6's @ 19.2" O.C. U.N.O. (MAX. SPAN = 11'-0")
2.) ALL ANTHONY POWER BEAMS ARE AS MANUFACTURED BY ANTHONY FOREST PRODUCTS CO. EQUIVALENT PRODUCT MAY BE SUBSTITUTED.
3.) ALL EXTERIOR WALLS ARE TO BE SHEATHED WITH 1/2" PLYWOOD. INTERIOR WALLS TO BE SHEATHED ARE INDICATED BY A DASHED LINE WITH 'SW': __ __ __ OR _SW_ _REF. SHEARWALL DIAGRAMS, DETAILS, AND NOTES ON DETAIL SHEET FOR NAILING PATTERN, ETC. OSB BOARD WITH EQUIVALENT STRUCTURAL PROPERTIES MAY BE SUBSTITUTED.
4.) BEAR ALL BEAMS ON MULTIPLE WALL STUDS GLUED AND NAILED TO ACT AS A SINGLE UNIT. NUMBER OF STUDS AT EACH END MUST EQUAL BEAM WIDTH UNLESS NOTED OTHERWISE.
5.) ALL "BEAMS" TO BE FLUSH WHERE REQUIRED TO MAINTAIN PROPER CEILING LINE. IF CONDITIONS ALLOW, BEAM MAY BE DROPPED FOR BOTTOM CHORD BEARING TRUSS.
6.) ALL EXTERIOR WALLS ARE 2 X 4 FOR WALLS LESS THAN 10' OR 2 X 6 STUDS @ 16" O.C. FOR WALLS ABOVE 10' U.N.O.
7.) ALL FIRST FLOOR INTERIOR WALL STUDS ARE A MINIMUM OF 2 X 4's @ 16" O.C. U.N.O.
8.) ALL FIRST FLOOR LOAD BEARING HEADERS ARE 2 - 2 X 12 #2 SYP, U. N. O. (USE 1/2" PLYWOOD SPACER AT 3 1/2" WALL WIDTHS.) REFER TO DETAIL SHEET FOR NON-LOAD BEARING HEADERS
9.) F.B. = FLUSH BEAM
D.B. = DROP BEAM

= FIRST FLOOR

= ROOF OUTLINE

10.) TRP = TRIPLE FRB = FOR ROOF BRACE
11.) UNO = UNLESS NOTED OTHERWISE
12.) PLF = POUNDS PER LINEAR FOOT
13.) SW = SHEAR WALL
14.) ■ = HOLD DOWN SEE DETAILS. (STHD14, HTT5, HDSB.)

FIRST FLOOR CEILING FRAMING PLAN

SCALE 1/4" = 1'-0" FOR 22X34
SCALE 1/8" = 1'-0" FOR 11X17

LEGEND

= EXISTING WALL TO REMAIN
= EXISTING WALL TO BE REMOVED
= EXISTING FRAMING
= NEW WALL
= NEW FLUSH BEAMS
(N) = NEW STRUCTURAL FRAMING
(E) = EXISTING STRUCTURAL FRAMING
= EXISTING JOIST SPAN DIRECTION

FOR REVIEW
THIS DOCUMENT IS RELEASED FOR THE PURPOSE OF PRELIMINARY REVIEW UNDER THE AUTHORITY OF KARL BRECKON, P.E. 73425 IT IS NOT TO BE USED FOR CONSTRUCTION PURPOSES.
DATE: 7/10/17

NO.	REVISION	DATE
A	ISSUED FOR REVIEW	7-10-17
B	REVISED PER UPDATED ARCHITECTURAL PLAN	7-17-17

THIS DRAWING IS THE PROPERTY OF BEC ENGINEERS AND CONSULTANTS REG # F-18690 AND MAY NOT BE REPRODUCED OR USED WITHOUT WRITTEN PERMISSION. ANY UNAUTHORIZED ALTERATION WILL VOID RESPONSIBILITY BY BEC, ITS EMPLOYEES AND REPRESENTATIVES.

BEC ENGINEERS AND CONSULTANTS, LLC
3200 Wilcrest Dr., Suite 440
Houston, TX 77042
Ph: 832.248.3771
Fax: 832.240.2724
TBPE REGIS. #: F-18690

DRN: DW | CHKD.: RS | DES.: KB
REF. NO. 17-1259

JESUS PACECHO
3006 BROADMEAD
HOUSTON, TX 77025
FIRST FLOOR FRAMING PLAN

PLAN NO. S-2

DocuSign Envelope ID: F70BFD88-70CC-45F9-BE6D-B998E1EC1ABC3

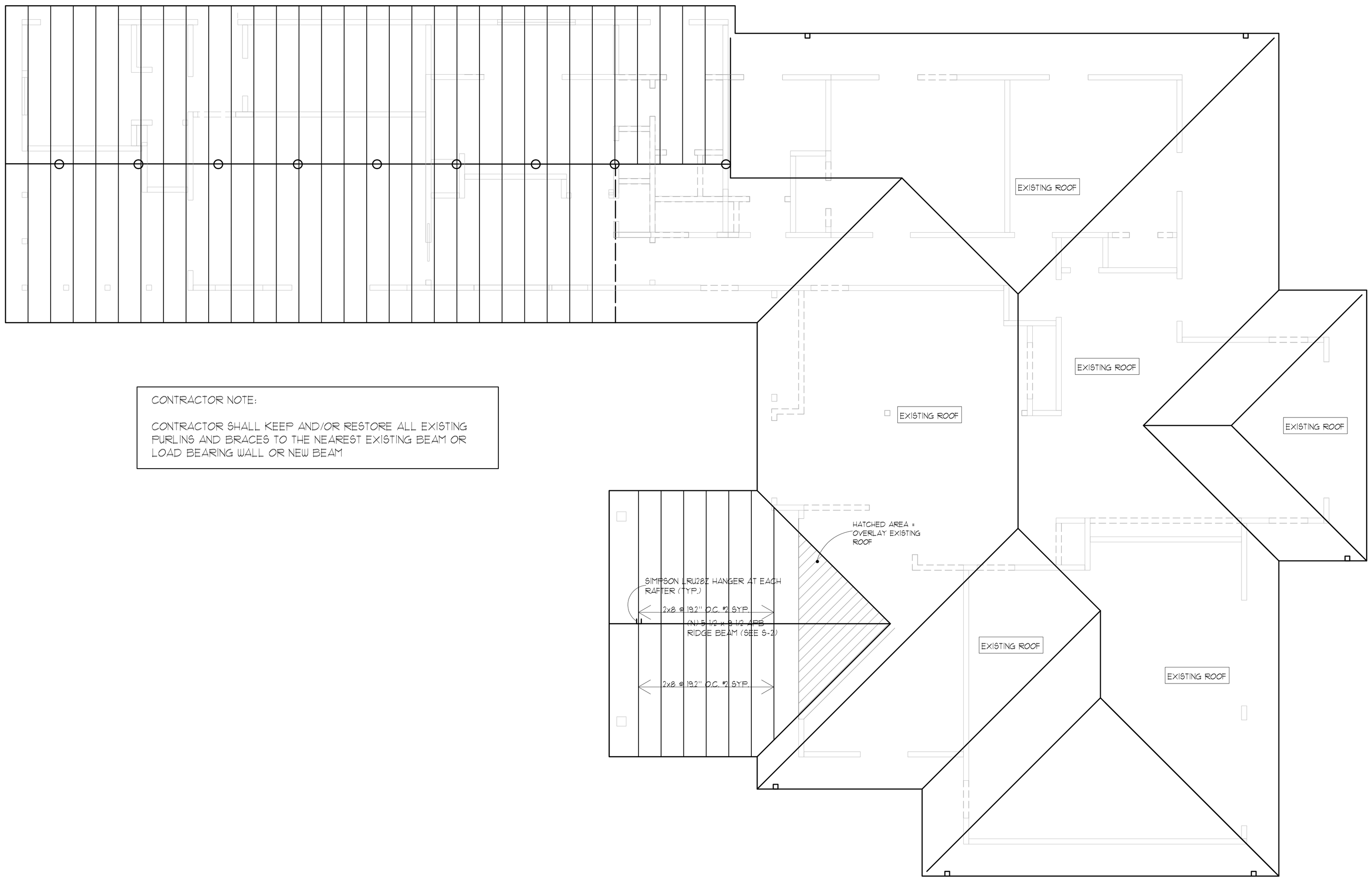

CONTRACTOR NOTE:

CONTRACTOR SHALL KEEP AND/OR RESTORE ALL EXISTING PURLINS AND BRACES TO THE NEAREST EXISTING BEAM OR LOAD BEARING WALL OR NEW BEAM

ROOF LEVEL FRAMING PLAN

SCALE 1/8" = 1'-0" @ 11X17
SCALE 1/4" = 1'-0" @ 22X34

ROOF LEVEL NOTES:

1.) ALL FRAMING TO BE #2 SYP, UNLESS NOTED OTHERWISE.
2.) ALL RAFTERS TO BE 2x6 @ 19.2" O.C. U.N.O. MAXIMUM SPAN 11'-9".
3.) ALL HIP, VALLEY AND RIDGE MEMBERS ARE TO BE #2 SYP, ONE NOMINAL SIZE LARGER THAN THE SUPPORTED MEMBERS, U.N.O.
4.) SEE ARCHITECTURAL DRAWINGS FOR ROOF PITCH AND PLATE HEIGHTS.
5.) DO NOT BRACE ROOF FRAMING DIRECTLY TO CEILING JOISTS U.N.O. ON PLAN.
6.) ATTACH RAFTERS TO TOP PLATES WITH SIMPSON H1 OR H2.5 HURRICANE TIES AT EVERY OTHER ROOF RAFTER U.N.O.
7.) ALL ROOF DECKING TO BE 1/2" CDX PLYWOOD OR APPA RATED EQUAL SHEATHING. STANDARD NAILING WITH 8d NAILS SHOULD BE 6" O.C. AT PLYWOOD EDGES AND 10" O.C. AT INTERIOR SUPPORTS, AROUND ROOF PERIMETER AND ROOF RIDGE. A STRIP AREA 9' WIDE SHOULD BE NAILED WITH 8d NAILS@ 4" O.C. ON THE ROOF EDGE AND ALL PLYWOOD SHEET EDGES AND 6" O.C. AT INTERIOR FRAMING SUPPORTS. USE "H" CLIP SPACERS WHEN APPLYING DECK.
8.) PLACE COLLAR TIES @ EVERY OTHER RAFTER U.N.O.
9.) —— —— —— 2x8 PURLIN SUPPORTED AT 4'-0" O.C. MAXIMUM. ALL MULTIPLE JOISTS AND BEAMS USED TO SUPPORT PURLIN BRACES MUST BE BRACED AT THE TOP EDGE TO PREVENT ROLLOVER OR LATERAL SWAY.
10.) 2-2x4 TEE BRACE UP TO 8'-0" LONG.
2-2x6 TEE BRACE OVER 8'-0" LONG.
——————► BRACING LOCATIONS FOR TEE BRACE. BRACE DOWN TO NEAREST WALL (OR FLOAT BEAM, IF SHOWN) AT MAX. 45° FROM VERTICAL.
11.) RAFTER ENDS ON OPPOSITE SIDES OF THE HIP AND VALLEY MEMBERS MAY BE STAGGERED NO MORE THAN 3" FOR OPPOSING RAFTERS. RAFTER ENDS ON OPPOSITE SIDES OF RIDGE MEMBERS SHOULD BE DIRECTLY OPPOSITE OF EACH OTHER.

FOR REVIEW

THIS DOCUMENT IS RELEASED FOR THE PURPOSE OF PRELIMINARY REVIEW UNDER THE AUTHORITY OF KARL BRECKON, P.E. 73425 IT IS NOT TO BE USED FOR CONSTRUCTION PURPOSES.

DATE: 7/10/17

NO.	REVISION	DATE
A	ISSUED FOR REVIEW	7-10-17
B	REVISED PER UPDATED ARCH PLANS 10-17	7-17-17

THIS DRAWING IS THE PROPERTY OF BEC ENGINEERS AND CONSULTANTS REG # F-18690 AND MAY NOT BE REPRODUCED OR USED WITHOUT WRITTEN PERMISSION. ANY UNAUTHORIZED ALTERATION WILL VOID RESPONSIBILITY BY BEC, ITS EMPLOYEES AND REPRESENTATIVES.

BEC ENGINEERS AND CONSULTANTS LLC
BEC ENGINEERS AND CONSULTANTS, LLC
3200 Wilcrest Dr, Suite 440
Houston, Texas 77042
Ph: 832-240-3771
Fax: 832-240-2724
TBPE REGIS. #: F-18690

DRN:	CHKD.:	DES.:
DW	RS	KB

REF. NO. 17-1259

JESUS PACECHO

3006 BROADMEAD
HOUSTON, TX 77025

ROOF FRAMING PLAN

PLAN NO. S-3

DocuSign Envelope ID: F79BFD88-70CC-45F9-BE60-B998 1EC1ABC3

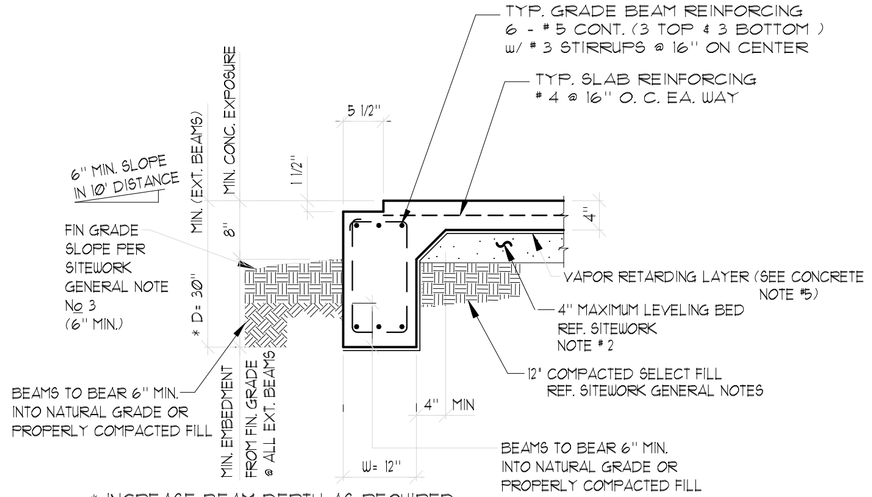

* INCREASE BEAM DEPTH AS REQUIRED @ EXTERIOR BEAMS TO ASSURE MINIMUM EMBEDMENT REQUIREMENT.

1

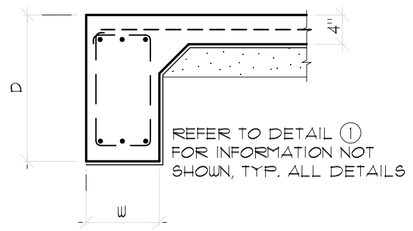

2

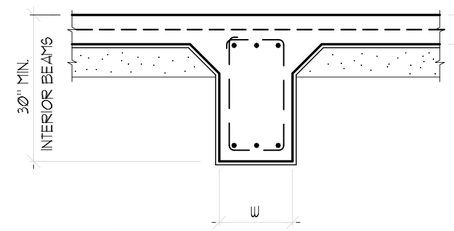

3

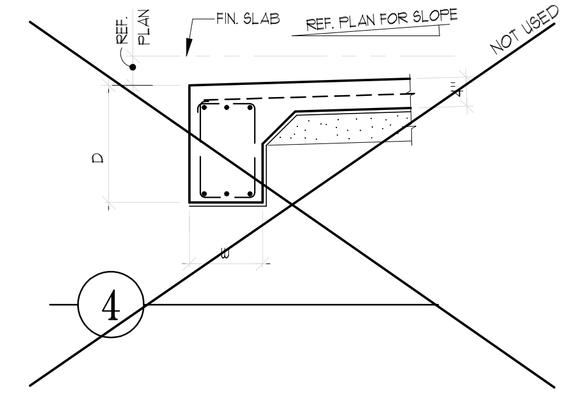

4

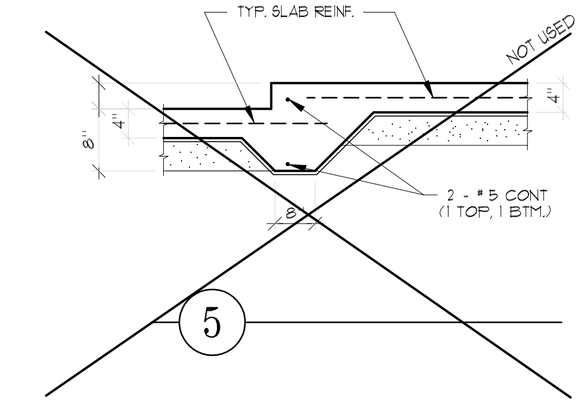

5

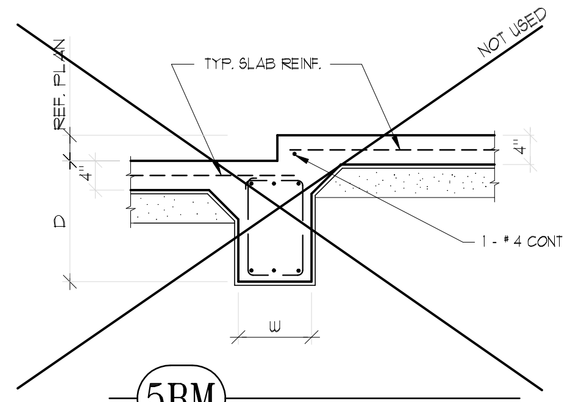

5BM

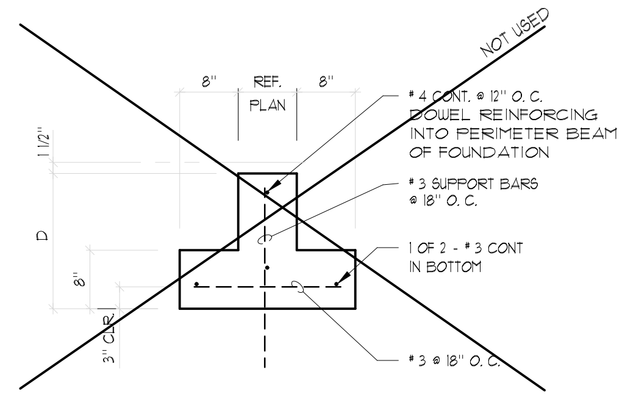

6

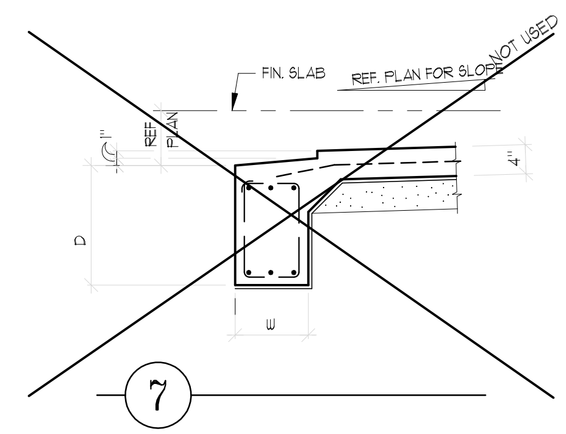

7

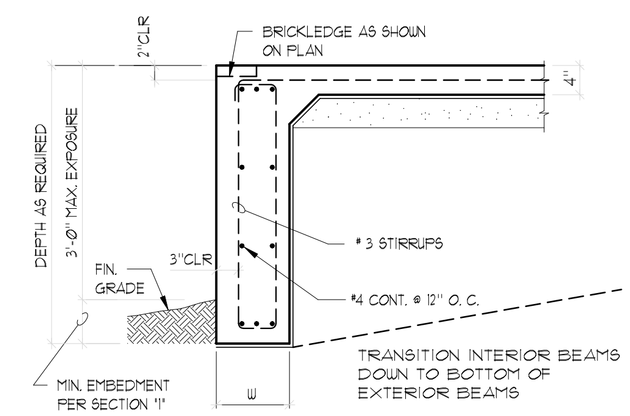

EXTRA BEAM DEPTH DETAIL

USE WHERE SITE CONDITIONS REQUIRE EXTERIOR BEAM EXPOSURE GREATER THAN 1'-6"

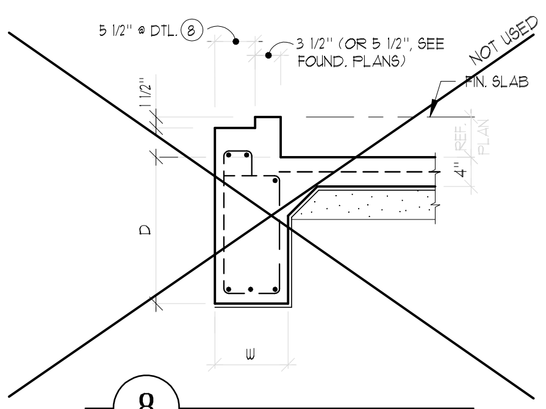

8

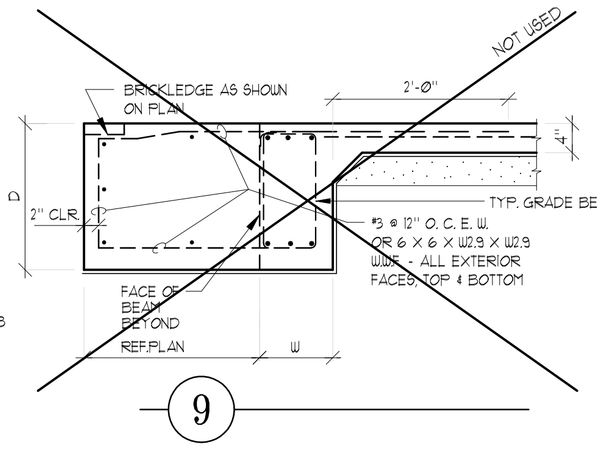

9

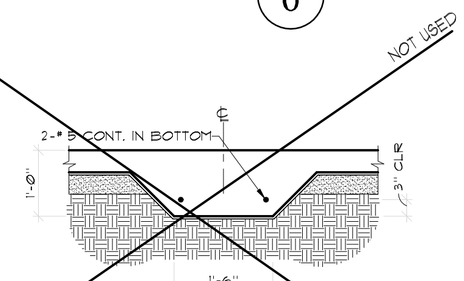

SECTION "A-A"

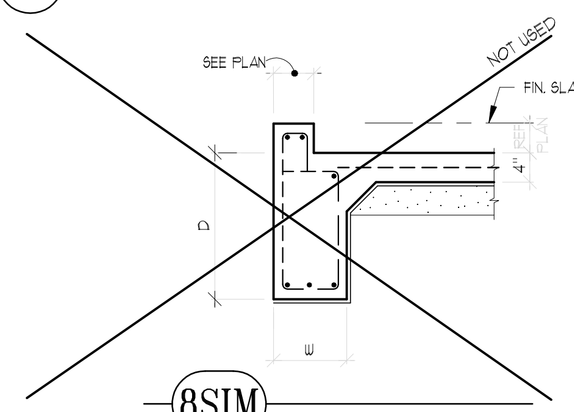

8SIM

GENERAL NOTES - SITEWORK

1.) SITE PREPARATION BENEATH THE FOUNDATION SYSTEM SHALL BE IN ACCORDANCE WITH THE SOIL REPORT DESIGN RECOMMENDATIONS WHICH APPLY TO THE TYPE OF FOUNDATION SYSTEM BEING CONSTRUCTED OR SHOULD MEET THE FOLLOWING MINIMUM REQUIREMENTS:

A.) STRIP ALL VEGETATION DOWN TO NATURAL SOIL. REMOVE ALL TREES WITHIN A CLOSE PROXIMITY OF THE FOUNDATION.

B.) PROOF-ROLL EXPOSED SUBGRADE. BACKFILL AND COMPACT TREE-HOLES OR SOFT POCKETS WITH MATERIAL SIMILAR TO THE SITE MATERIALS.

C.) BRING SUBGRADE TO REQUIRED ELEVATION WITH SELECT FILL MATERIAL. SELECT FILL SHALL BE SANDY CLAY OR CLAYEY SAND, FREE OF ORGANIC MATERIAL, HAVING A PLASTICITY INDEX GREATER THAN 7 BUT LESS THAN 20.

D.) FILL SHALL BE PLACED IN MAXIMUM 8" LIFTS AND COMPACTED TO 95% OF ITS MAXIMUM DRY DENSITY AS DETERMINED BY ASTM D698 (STANDARD PROCTOR). WHERE LARGE DEPTHS OF FILL OCCUR, FIELD DENSITY TESTS ARE REQUIRED FOR EACH LIFT LOCATED AT OR BELOW THE BOTTOM OF THE SLAB.

2. THE LEVELING BED SHALL BE FIRM STABLE BANK SAND OR OTHER CLEAN GRANULAR MATERIAL.

3. INITIAL SITE GRADING SHALL BE COMPLETED PRIOR TO SETTING FORMS. FINAL GRADE SHALL SLOPE AWAY FROM THE FOUNDATION 1 INCH/FOOT FOR THE FIRST 5 FEET SUCH THAT POSITIVE DRAINAGE AWAY FROM THE SLAB IS ASSURED.

4. DURING CONSTRUCTION A DRAINAGE TRENCH SHALL BE FORMED SUCH THAT ANY WATER WHICH INTRUDES INTO THE FOUNDATION MAKE UP WILL IMMEDIATELY DRAIN OUT OF THE BOTTOM OF THE BEAMS.

5. IF A SOIL REPORT CONTAINING FOUNDATION DESIGN RECOMMENDATIONS WAS SUPPLIED FOR THIS PROJECT, THE SOIL REPORT SHALL CONTROL. IF A CONFLICT OCCURS BETWEEN THESE MIN. REQUIREMENTS AND THE SOIL ENGINEER'S RECOMMENDATIONS.

6. THE CLIENT AND CONTRACTOR SHALL READ THE SOIL REPORT(S) REFERENCED BELOW AND BE THOROUGHLY FAMILIAR WITH AND UNDERSTAND ALL THE SITE AND SUBGRADE PREPARATION AND MAINTENANCE REQUIREMENTS AND RECOMMENDATIONS CONTAINED THEREIN.

GENERAL NOTES - REINFORCING STEEL

1. REINFORCING STEEL SHALL BE ASTM A615 GRADE 60 WITH DEFORMATIONS PER ASTM A305 AND SHALL BE DETAILED AND INSTALLED PER ACI-318 LATEST EDITION.

2. ~~WELDED WIRE FABRIC SHALL BE 6 X 6 X W2.9 X W2.9 WWF (6 GAUGE) PER ASTM A185. WWF SHALL BE SUPPLIED IN SHEETS AND SHALL BE SUPPORTED AT 18 INCHES EACH WAY ON WWF CHAIRS.~~

3. MINIMUM REINFORCING STEEL AND WWF COVERAGE SHALL BE AS FOLLOWS:

SLABS-ON-GROUND	2 1/2" FROM EARTH
GRADE BEAMS	2 1/2" BOTTOM, 2" TOP AND SIDES

4. WHERE FIELD SPLICES IN THE CONTINUOUS REINFORCING OCCUR, BARS SHALL BE LAPPED A DISTANCE OF 30 TIMES THE BAR DIAMETER. WWF LAPS SHALL BE 10 INCHES MINIMUM.

5. PROVIDE CORNER BARS IN THE OUTSIDE FACE OF EXTERIOR GRADE BEAMS TO MATCH THE HORIZONTAL STEEL FROM THE INTERSECTING INTERIOR AND EXTERIOR BEAMS OR BEND CONTINUOUS REINFORCING STEEL AROUND CORNERS AND OVERLAP SPLICES 30 BAR DIAMETERS.

6. AT ALL RE-ENTRANT CORNERS PLACE 2 #5 X 6'-0" IN THE SLAB.

GENERAL NOTES - CONCRETE

1. CONCRETE SHALL BE SUPPLIED AND CONSTRUCTED IN ACCORDANCE WITH ACI-318 LATEST EDITION AND SHALL HAVE A MINIMUM 28 DAY COMPRESSIVE STRENGTH OF 3000 PSI.

2. IF MORE WORKABILITY IS NEEDED, CONTRACTOR SHALL SPECIFY REQUIRED SLUMP ON JOB ORDER. CONCRETE PLANT CAN INCREASE WORKABILITY BY ADDING UP TO 5% AIR ENTRAINMENT ADDITIONAL CEMENT, OR OTHER APPROVED ADMIXTURES.

3. WHERE FLYASH IS USED, ONLY TYPE C FLYASH SHALL BE ACCEPTED.

4. CONCRETE SHALL NOT BE PLACED AT TEMPERATURES BELOW 40°F OR RAINY WEATHER OR OTHER ADVERSE WEATHER CONDITIONS.

5. A 6 MIL POLYETHYLENE VAPOR RETARDING LAYER SHALL BE PLACED UNDER ALL SLABS. ALL LAPS SHALL BE TAPED.

6. FORMS TO BE STRIPPED NO LESS THAN 24 HOURS AND NO MORE THAN 6 DAYS AFTER PLACEMENT OF CONCRETE.

7. CURE ALL SLABS WITH A CHEMICAL CURING COMPOUND OR KEEP MOIST FOR 7 DAYS AFTER PLACEMENT.

8. BUILDER SHALL VERIFY ALL DIMENSIONS, DROPS, OFFSETS, BRICKLEDGES, INSERTS AND OPENINGS WITH ARCHITECTURAL DRAWINGS.

9. PLACE 5/8" DIA. X 10" LONG ANCHOR BOLTS W/ 2 X 2 SQUARE WASHERS @ 4'-0" O. C. REF. PLAN FOR ADDITIONAL HOLD-DOWNS AND THEIR LOCATIONS.

GENERAL NOTES - DESIGN

1. CONSTRUCTION SHALL BE IN ACCORDANCE WITH THE I. R. C. CODE, LATEST EDITION OR LOCAL BUILDING CODES WHERE APPLICABLE.

2. THIS FOUNDATION IS DESIGNED IN ACCORDANCE WITH CURRENT ACCEPTABLE ENGINEERING PRACTICES FOR THE SITE SHOWN ON THE PLANS AND MAY NOT BE USED IN ANY OTHER LOCATION.

3. AS WITH ALL GROUND SUPPORTED SLABS, THIS FOUNDATION IS DESIGNED TO MOVE WITH THE UNDERLYING SOILS WHILE SUSTAINING A CALCULATED AMOUNT OF FLEXURE. IT MAY ALSO SUSTAIN NORMAL TEMPERATURE AND SHRINKAGE CRACKS AS A RESULT OF THE CONCRETE CURING PROCESS.

4. THE DESIGN IS BASED ON THE FOLLOWING ASSUMPTIONS:
   A. FINAL GRADING IS COMPLETED AS OUTLINED IN THE GENERAL NOTES - SITEWORK.
   B. FINAL GRADE AND A FAIRLY UNIFORM MOISTURE LEVEL IS MAINTAINED FOR THE LIFE OF THE FOUNDATION.
   C. THE FOUNDATION IS NOT INSTALLED DURING A DRY OR WET PERIOD WHICH IS CONSIDERED EXTREME OR ABNORMAL FOR THE AREA. IF SUCH IS THE CASE, BUILDER SHALL NOTIFY THE ENGINEER PRIOR TO TRENCHING FOR A POSSIBLE RE-DESIGN.
   D. A SLAB ON GRADE FOUNDATION MAY NOT BE USED IF EXISTING SITE SLOPE IS GREATER THAN 5%. IF SUCH IS THE CASE, BUILDER SHALL NOTIFY THE ENGINEER PRIOR TO TRENCHING FOR A POSSIBLE RE-DESIGN.
   E. PERIMETER OF FOUNDATION MUST BE LOCATED A MINIMUM OF 40' FROM THE HIGH BANK OF ANY DRAINAGE DITCH, DETENTION POND, CREEK, OR STEEP EMBANKMENT UNLESS A GREATER DISTANCE IS SPECIFIED IN THE SOIL REPORT.

5.) NO SITE (LOT) SPECIFIC SOIL REPORT PROVIDED FOR THIS PROJECT. THE INFORMATION CONTAINED IN THE ABOVE REFERENCED SOIL REPORT(S) REFLECTS CONDITIONS AS FOUND AT THE LOCATION OF THE BORINGS ON THE DATE THAT THEY WERE DRILLED. ACTUAL CONDITIONS AT LOCATIONS BETWEEN AND SURROUNDING THE BORINGS MAY DIFFER FROM THE SOIL STRATIGRAPHY DEPICTED BY THE BORINGS. IF THERE ARE ANY UNUSUAL CONDITIONS DIFFERING FROM THOSE DESCRIBED IN THE SOIL REPORT OR IF ANY CHANGES HAVE BEEN IMPOSED ON THE SOILS IN QUESTION SINCE THE REPORT WAS WRITTEN, THEN THE DESIGN ENGINEER SHOULD BE NOTIFIED IMMEDIATELY AS A REVIEW OF THE EFFECTS ON THE PERFORMANCE OF THE DESIGNED FOUNDATION WILL BE REQUIRED.

GENERAL NOTES: MISCELLANEOUS & LIMITATIONS

1. BEC-LIN ENGINEERING, LP ADVISES THE BUILDER AND ALL CLIENTS THAT INSPECTION SERVICES ARE AVAILABLE PRIOR TO CONCRETE POUR, DURING THE POUR AND DURING THE STRESSING OF THE POST TENSIONING STRANDS. IF THESE INSPECTIONS ARE NOT PERFORMED BY BEC-LIN, THEN BEC-LIN ACCEPTS NO RESPONSIBILITY WHATSOEVER FOR THE PROPER IMPLEMENTATION OF ITS PLANS AND SPECIFICATIONS AND IT HAS NO OBLIGATION TO INSURE THAT THE PLANS AND SPECIFICATIONS PROVIDED BY IT ARE FOLLOWED.

2. IN THE EVENT A SOIL REPORT ON THE SPECIFIC TRACT OF LAND UPON WHICH THE PROPOSED STRUCTURE IS TO BE CONSTRUCTED IS PROVIDED BY THE CLIENT TO BEC-LIN ENGINEERING, LP BEC-LIN WILL RELY ON THE INFORMATION CONTAINED IN THIS SOIL REPORT IN DESIGNING ITS PLANS AND SPECIFICATIONS FOR THE CLIENT. HOWEVER BEC-LIN ENGINEERING, LP DOES NOT ASSUME OR TAKE RESPONSIBILITY IN ANY WAY FOR THE ACCURACY OF THE SOIL REPORT PROVIDED OR ANY INFORMATION CONTAINED THEREIN WHICH MAY BE RELIED UPON BY BEC-LIN IN DESIGNING THE FOUNDATION FOR THE PROPOSED STRUCTURE.

3. A CURRENT SOIL REPORT HAS BEEN REQUESTED FROM THE CLIENT BY BEC-LIN ENGINEERING, LP. IF NO SOIL REPORT IS PROVIDED BY THE CLIENT, BEC-LIN ENGINEERING, LP DESIGNS WILL BE BASED SOLELY ON THE AVERAGE SOIL CONDITIONS IN THE GENERAL LOCATION OF THE PROPOSED CONSTRUCTION SITE IN THESE INSTANCES, THE DESIGNS ARE TO BE NOTED AS BEING SUFFICIENT ONLY FOR THE AVERAGE SOIL CONDITIONS IN THE GENERAL LOCATION OF THE PROPOSED CONSTRUCTION SITE. IN THIS CASE THE SOIL REPORTS LISTED HAVE BEEN REFERENCED ONLY FOR THE BORING LOGS AND RAW SOIL DATA CONTAINED THEREIN IN ORDER TO DETERMINE THE AVERAGE SOIL CONDITIONS. ALL SITEWORK, GRADING OR COMPACTION, ETC. SHOULD BE AS PER THE SPECIFICATIONS LISTED ON THIS DETAIL SHEET.

4. WARNINGS:
   A. THE FOUNDATION SYSTEM WILL SLOPE OR TILT AND BEND IF THE BEARING SOILS UNEVENLY SETTLE, SWELL OR SHRINK DUE TO UNEVEN MOISTURE CONTENTS. SOME OVERALL TILTING OF SLAB-ON-GRADE FOUNDATIONS, AS WELL AS SOME FLEXURE OR BENDING, IS EXPECTED AND ALLOWED.
   B. THE HOMEOWNER MUST INSURE THAT THE MOISTURE CONTENT OF THE SOIL IS MAINTAINED AT A CONSISTENT LEVEL. DRAINAGE SHOULD BE MAINTAINED SUCH THAT PONDING OF WATER DOES NOT DEVELOP. IF WATER IS PONDING, THE BUILDER SHOULD BE CONTACTED TO IMPROVE DRAINAGE.
   C. THE HOMEOWNER SHOULD NOT PLANT TREES ADJACENT TO THE SLAB SUCH THAT THE ROOT SYSTEMS CAN UNDERMINE THE SLAB.
   D. THE HOMEOWNER SHOULD CONTINUOUSLY INSPECT THE FOUNDATION PERIMETER OF HIS RESIDENCE DURING HOT AND DRY PERIODS TO INSURE THAT ADEQUATE WATERING IS BEING PERFORMED.
   E. MINIMUM DISTANCE BETWEEN ANY FUTURE POOL AND THE PERIMETER BEAMS SHOULD BE 15'-0".
   F. THE CLIENT MUST ADVISE THE ORIGINAL BUYER(S) OF THE LIMITATIONS AND STIPULATIONS PLACED ON THE PROJECT (BY THE CLIENT). THE CLIENT MUST ALSO INFORM THE ORIGINAL BUYER OR OCCUPANT OF THE RESIDENCE OF THE TYPE OF FOUNDATION USED TO SUPPORT THE STRUCTURE, AS WELL AS THE EXPECTED PERFORMANCE PARAMETERS AND STANDARDS (ALLOWABLE SETTLEMENT, DEFLECTION CRITERIA ETC.) AND THE MAINTENANCE AND DRAINAGE REQUIREMENTS AS NOTED HEREIN. (INCLUDING THE HOMEOWNER'S MAINTENANCE RESPONSIBILITIES, AND THE SPECIFICATIONS NOTED.) (ONE OF THE WAYS THIS IS TYPICALLY ACCOMPLISHED IS THROUGH A HOMEOWNER MANUAL, WHICH IS GIVEN BY THE BUILDER TO THE FIRST OWNER. THE MANUAL CONTAINS GENERAL INFORMATION ABOUT THE CONSTRUCTION AND MAINTENANCE OF VARIOUS COMPONENTS OF THE HOME, INCLUDING THE FOUNDATION SYSTEM. THIS MANUAL STAYS WITH THE HOME AND IS PASSED FROM EACH PREVIOUS OWNER TO THE NEXT OR NEW BUYER/OWNER.)

5. THE DESIGN PROCEDURES AND CRITERIA USED BY BEC-LIN ARE IN ACCORDANCE WITH GENERALLY ACCEPTED STANDARDS AND PRACTICES FOR A STRUCTURE OF THIS TYPE.

6. THE SERVICES PROVIDED BY BEC-LIN ENGINEERING, LP INCLUDE ONLY THE DESIGN AND INSPECTION(S) OF THE STRUCTURAL COMPONENTS (REINFORCEMENT AND MATERIALS) OF THE FOUNDATION SYSTEM AND ARE LIMITED TO THE SCOPE OF SERVICES AS REQUESTED AND ALLOWED BY BEC-LIN'S AGREEMENT (VERBAL AND/OR CONTRACTURAL) WITH THE CLIENT. ITEMS AND EXCLUSIONS NOT COVERED WITHIN BEC-LIN'S SCOPE OF PROFESSIONAL SERVICES (AND WHICH ARE PROVIDED BY OTHER PROFESSIONAL ENTITIES, CONTRACTORS, OR AGENCIES) INCLUDE BUT ARE NOT LIMITED TO: INSERTS AND EMBEDDED ITEMS (IE. ANCHOR BOLTS, HOLDOWNS, CONDUIT SLEEVES, WATERSTOPS ETC.) FILL PLACEMENT, LOT PREPARATION OR VERIFICATION FOR CORRECT DENSITY OF SOILS, TOPOGRAPHY OR SITE SUITABILITY VERIFICATION, BEARING CAPACITY, FINAL LOT DRAINAGE VERIFICATION OR PLUMBING INSTALLATION.

7. AS PER AMERICAN CONCRETE INSTITUTE (ACI) BUILDING CODE REQUIREMENTS FOR MASONRY STRUCTURES (ACI 530) AND SPECIFICATION FOR MASONRY STRUCTURES (ACI 530.1) AND PER LOCAL BUILDING CODES, BUILDER SHOULD LOCATE EXPANSION JOINTS IN BRICK VENEER EVERY 20' - 25' MAXIMUM. PLACEMENT IS RECOMMENDED AT RETURNS AND JAMBS OF WALL OPENINGS. EXPANSION JOINT FILLERS MUST BE COMPRESSABLE SO THE ANTICIPATED EXPANSION OF THE MASONRY CAN OCCUR WITHOUT IMPOSING STRESS.

8.) ANY TREES WHICH WERE REMOVED FROM THE BUILDING SITE ITSELF (WITHIN THE FORMS) OR WERE CLOSER THAN THE TREE'S CANOPY OVERHANG TO THE FORM EDGE, MAY HAVE LOWERED THE BEARING SOIL'S MOISTURE CONTENT WITHIN THE TREE ROOT ZONE(S) TO LEVELS BELOW THOSE OF THE SURROUNDING BEARING SOILS. THE EXPANSION POTENTIAL OF THESE LOCALIZED ROOT ZONE SOILS COULD BE LARGER THAN THE VALUES NOTED IN THE SOIL REPORT. IF TREES WERE REMOVED WITHIN THE PROXIMITY NOTED ABOVE, STEPS MAY BE REQUIRED TO STABALIZE OR REMOISTURE THESE SOILS TO MATCH THE MOISTURE LEVELS (OR POTENTIAL EXPANSION PROPERTIES) OF THE SOILS OUTSIDE THE ROOT ZONE(S). THE BUILDER SHOULD CONTACT THE GEOTECHNICAL ENGINEER FOR SPECIFIC RECOMMENDATIONS AND PROCEDURES.

FOR REVIEW

THIS DOCUMENT IS RELEASED FOR THE PURPOSE OF PRELIMINARY REVIEW UNDER THE AUTHORITY OF KARL BRECKON, P.E. 73425 IT IS NOT TO BE USED FOR CONSTRUCTION PURPOSES.

DATE: 7/10/17

NO.	REVISION	DATE
A	ISSUED FOR REVIEW	7-10-17
B	REVISED AND ISSUED FOR REVIEW	7-17-17

THIS DRAWING IS THE PROPERTY OF BEC ENGINEERS AND CONSULTANTS REG # F-18690 AND MAY NOT BE REPRODUCED OR USED WITHOUT WRITTEN PERMISSION ANY UNAUTHORIZED ALTERATION WILL VOID RESPONSIBILITY BY BEC, ITS EMPLOYEES AND REPRESENTATIVES.

BEC ENGINEERS AND CONSULTANTS, LLC
3200 Wilcrest Dr, Suite 440
Houston, Texas 77042
Ph: 832.240.3771
Fax: 832.240.2724
TBPE REGIS. #: F-18690

DRN: DW | CHKD: RS | DES: KB

REF. NO. 17-1259

JESUS PACECHO

3006 BROADMEAD
HOUSTON, TX 77025

FOUNDATION DETAILS

PLAN NO. S-4

DocuSign Envelope ID: F70BFD88-70CC-45F9-8E60-8998E1EC1ABC3

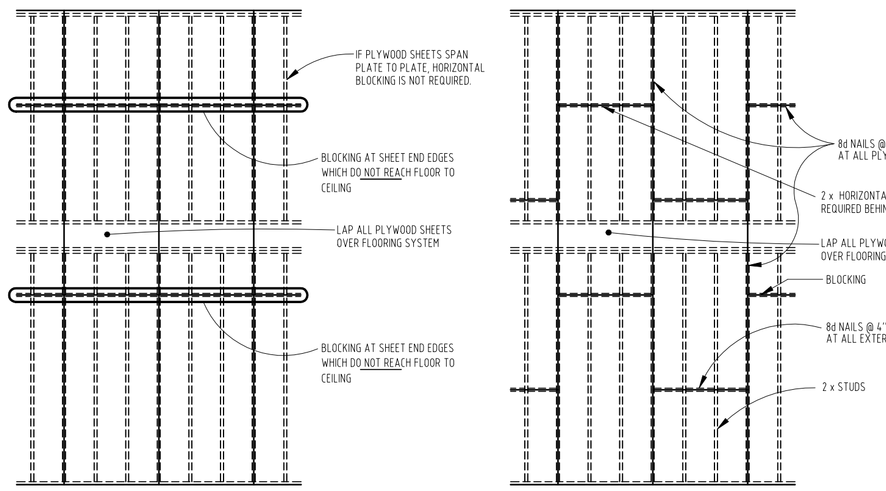

PLYWOOD BLOCKING AND NAILING PATTERN FOR EXTERIOR WALLS

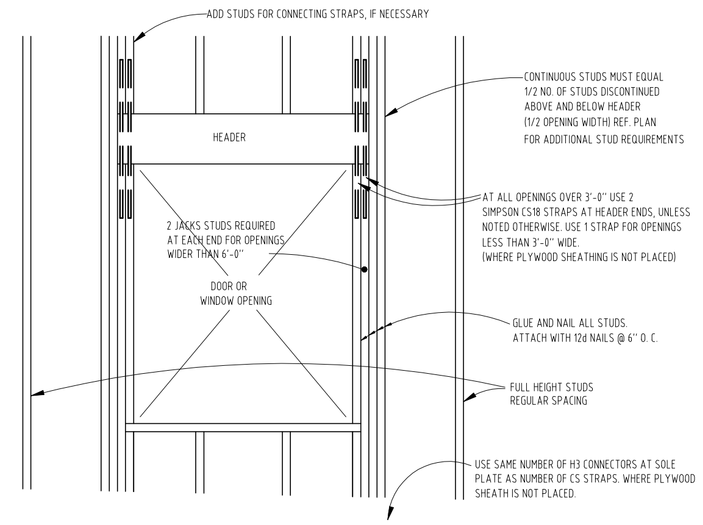

WALL REINF. AROUND WINDOW OPENINGS

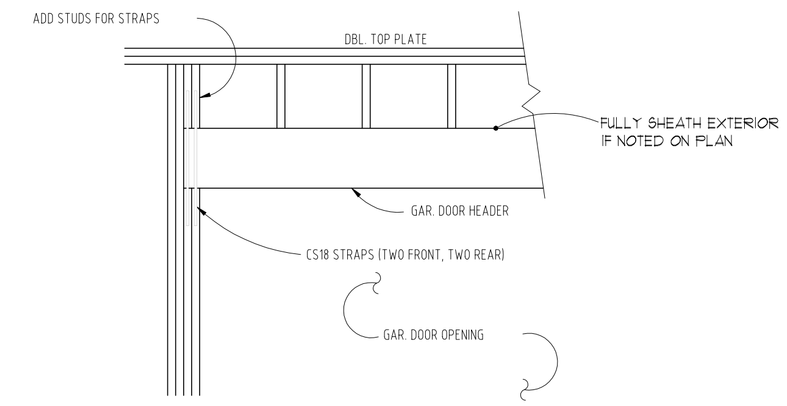

GARAGE DOOR OPENING REINF.

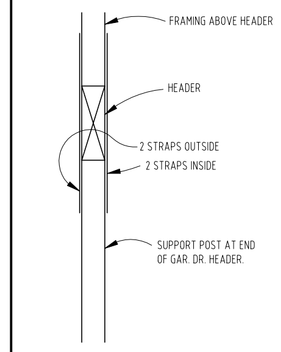

AT GARAGE DOOR OPENING USE 4 STRAPS AT EACH END. (2 INSIDE, 2 OUTSIDE)

WALL REINF. AROUND GARAGE DOOR OPENINGS

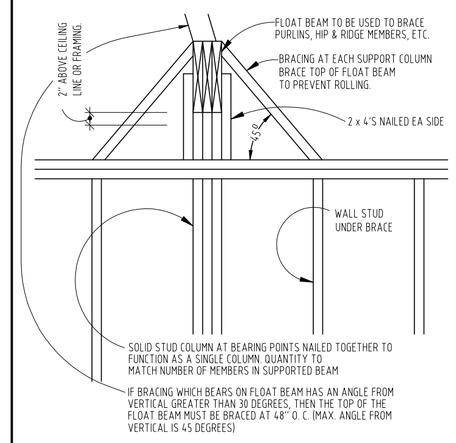

FLOAT BEAM DETAIL

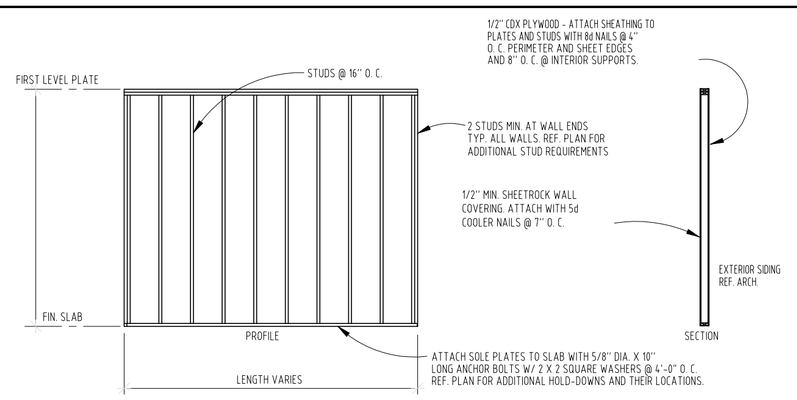

FIRST FLOOR EXTERIOR SHEARWALL – TYPICAL DETAIL

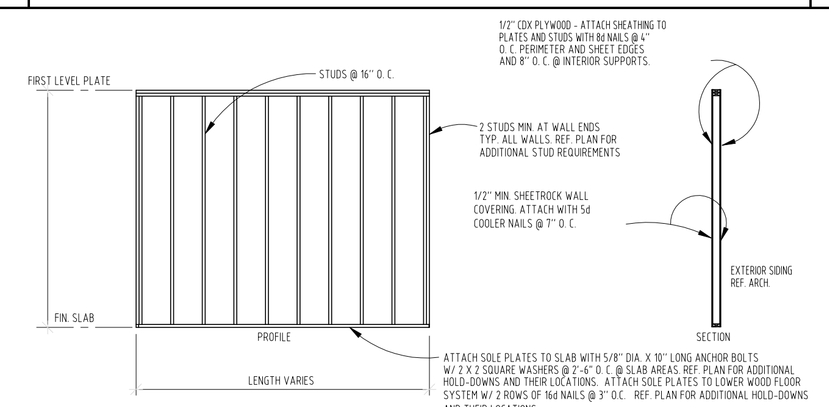

FIRST FLOOR INTERIOR & EXTERIOR DOUBLE SHEARWALL – TYPICAL DETAIL

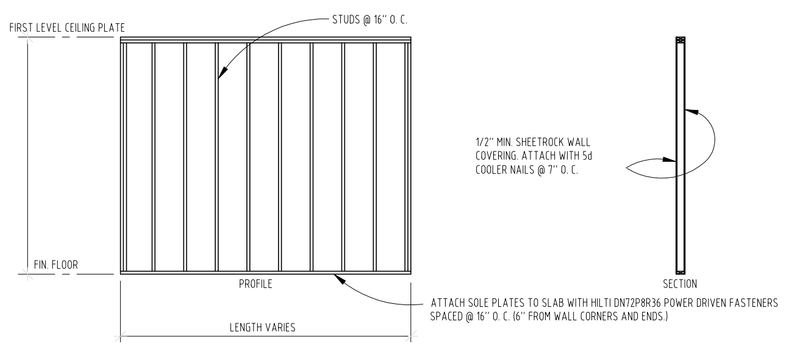

FIRST FLOOR INTERIOR WALL – TYPICAL DETAIL

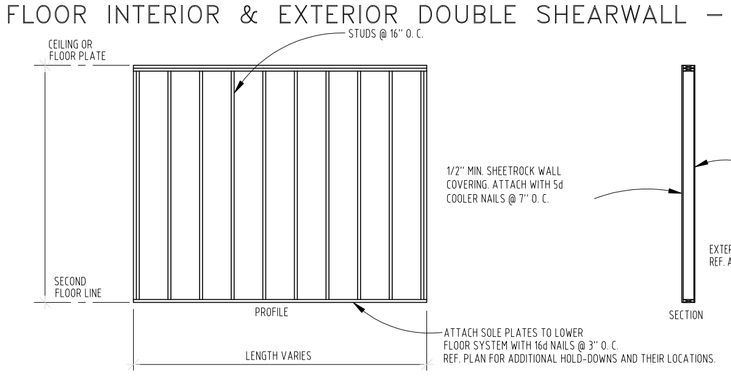

SECOND OR THIRD FLOOR EXTERIOR SHEARWALL

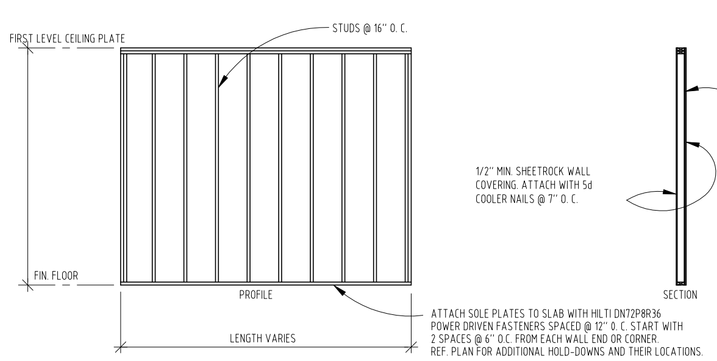

FIRST FLOOR INTERIOR SHEARWALL – TYPICAL DETAIL
INDICATED BY "SW" ON PLAN.

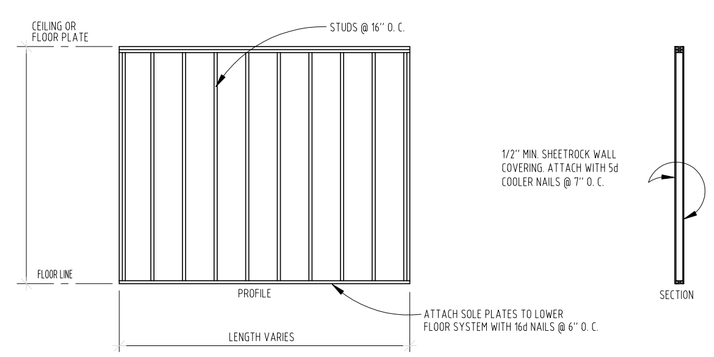

SECOND OR THIRD FLOOR INTERIOR WALL TYPICAL DETAIL

PLYWOOD AND SHEETROCK NAILING DIAGRAMS

INDICATED ON PLAN BY "SW". LENGTH SPECIFIED WHERE REQUIRED IS GIVEN IN FEET.

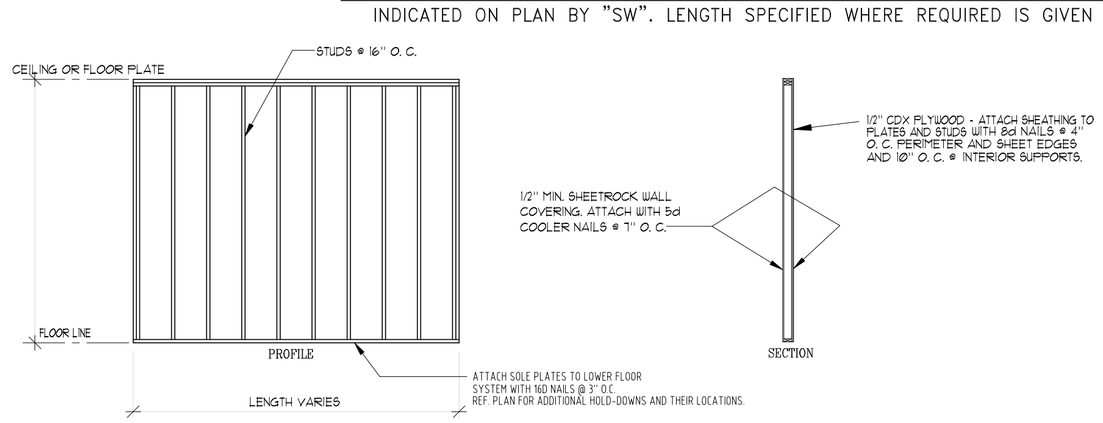

SECOND OR THIRD FLOOR INTERIOR SHEARWALL – TYPICAL DETAIL
INDICATED BY "SW" ON PLAN.

GENERAL NOTES - WOOD

1. All joists and rafters shall be #3 SYP unless otherwise noted. Multiple 2 x 12 beams shall be of #2 SYP. All wall studs to be stud grade or # 3 SYP. Attach all rafter ends to exterior wall framing with Simpson H1 connectors. Use Simpson HCP for Hip & Valley connectors. In lieu of 3 - 8d nails as noted in the I. R. C., attach ceiling and floor joists to top plates w/ 3 - 12d common nails (toenailed) at each end where a connector tie is not used.

2. Bolt holes through wood shall be drilled 1/16" maximum larger than the diameter of the bolts to be installed. Bolts through wood shall be fitted with standard washers.

3. Wood framing members and connections shall be constructed and nailed in accordance with the I.R.C. Building Code, latest edition, unless otherwise noted, detailed or specified.

4. Wall studs to be 2 X 4 or 2 X 6 studs @ 16" O.C. Attach each stud to top and sole plates with 2-16d nails each end. At exterior walls without plywood sheathing attach studs to the bottom sole plate with an additional Simpson H3 Hurricane anchor at 32" O.C. See plan notes for additional connections.

5. Joists under non-load bearing partitions shall be doubled.

6. Provide Simpson Galvanized "LU & LUS" standard joist hangers at solid sawn flush joint connections, and for trusses at flush beam connections, or use Simpson LBV hangers. All flush beam - to - beam connections are to be made with Simpson "HGLT & GLT" connectors, U. N. O. All Simpson specifications and recommendations are to be followed, unless noted otherwise.

7. Let-in diagonal wood frame bracing shall be continuous #2 KD 1 x 6, well anchored to head and sill plates and attached to each wall stud along diagonal.

8. Plywood or sheathing shall bear an AFPA Trademark and be stamped performance rated for application and exposure on panel. Face grain is to run perpendicular to support members for horizontal (floor and roof) sheathing.

9. Provide the same number of wall studs under beams as the number of member's in the beams unless noted otherwise (3 - 2 X 4 studs under each end of a beam made of 3 - 2 x 10 members). Studs to be glued and nailed to function as a single column.

10. Wood in direct contact with concrete or masonry shall be treated lumber.

11. Wood columns and posts shall be framed to true end bearings, and shall be positively anchored to foundation with approved post bases. Support column and post securely in position and protect base from deterioration. Columns and posts of treated wood may be placed directly on concrete or masonry. Use treated wood for all floor joists which are exposed or within 18" of the ground, or in permanent contact with earth.

12. Joists shall be laterally supported at the ends, at each support and at 8'-0" O.C. maximum by solid blocking. Where the ends of joists are nailed to a flush header, band or rim joists or to an adjoining stud, end blocking may be ommitted, U.N.O. at shearwalls. Solid blocking shall be not less than two inches (2") in thickness and shall match the depth of the joist.

13. At exterior sole plates provide 5/8" dia. x 10" long anchor bolts, with 2 x 2 square washers, at 4'-0" (max.) o. c., with bolts at 12" maximum from wall ends. Bolts shall be embeded 7" minimum into concrete. As an alternate Simpson "MAS" hold - downs may be used. Place 6" from wall ends and space at 2'-8" O.C. See plans for any additional spacing and hold-down and anchoring requirements.

14. All beams made up of multiple 2 X joists shall be connected as per the I.R.C. Code requirements, or local code, whichever is stricter.

15. Flitch beam bolts shall be 3/4" diameter, U. N. O., located 2" from steel plate edges and shall be staggered. Provide two (2) standard washers per bolt, one (1) washer installed on each side of beam.

16. Floor decking to be min. 3/4" T&G plywood nailed to floor framing with 10d nails spaced at 4" o. c. at plywood sheet edges and 10" o. c. at interior supports. (8 gauge screws 1 1/4" min. penetration into support member may be used in lieu of 10d nails for decking attachment, same spacing as nails.)

17. If not specified by applicable building codes, wood members, connections and construction shall comply with AITC Timber Construction Manual requirements, latest edition.

18. All Simpson connectors used with treated wood members treated with chromated copper arsenate (CCA-C) or DOT sodium borate (SBX) should be coated with standard G90 galvanizing and connected with nails, screws, or bolts that are post hot dip galvanized. All Simpson connectors used with wood members treated with alkaline copper quat (ACQ-C) and ACQ-D) or copper azole (CBA-A and CA-B) or any other "non-DOT" borate should be coated with Simpson Z max (G185) or post hot dip galvanized (HDG) and connected with nails, screws, or bolts that are post hot dip galvanized (HDG) or are stainless steel (SST300). Wood treated with amoniacal copper zinc arsenate (ACZA) or any other preservative treatment not noted above is NOT ALLOWED for construction.

19. For engineered wood products noted on plans, all manufacturer specifications and installation requirements must be followed U.N.O.

20. Temporary Bracing is strictly the responsibility of the Contractor. The structural elements of this project were designed by the Engineer of Record to resist the code specified loads that could occur in the final completed structure only, possibly relying upon other architectural and structural elements for bracing. The contractor is responsible to provide the design and construction of all temporary construction bracing needed to maintain the safety and integrity of all structural elements during construction until all architectural and structural elements are erected, fastened and otherwise completed as detailed on the design drawings.

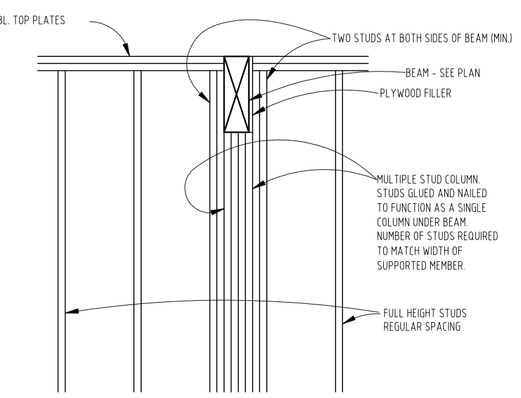

BEAM POCKET DETAIL

GENERAL NOTES - STRUCTURAL STEEL

1. Structural steel shall conform to ASTM A36 and be detailed, fabricated and erected per AISC Manual of Steel Construction, latest edition. Pipe columns shall be ASTM A501 or A53 types E or S Grade B. Tube columns shall be ASTM A500 Grade B. Paint one S/C Zinc Chromate.

2. Field connections may be welded or bolted. If bolted, use 3/4" minimum A325-N bolts unless otherwise shown. Unless noted, connections should develop the tabulated uniform load for the actual span from the AISC beam tables (two bolts minimum). Provide web connections for beams to columns unless noted otherwise.

3. Splicing of members is prohibited without prior approval by engineer. Connection plates are to be 3/8" thick unless noted otherwise.

4. All welding shall conform to the AWS code. Weld electrodes are to be E70XX series. Provide back-up strips as required.

5. Where wood blocking is indicated attached to steel, provide 9/16" holes at 24" O.C. staggered for 1/2" machine bolts. Field applied fasteners may be used.

6. Loose lintels shall be as scheduled on the structural drawings, or as noted in table below.

CLEAR SPAN	
4'-0" OR LESS	L3 1/2 X 3 1/2 X 5/16
6'-0"	L4 X 3 1/2 X 5/16
8'-0"	L5 X 3 1/2 X 5/16
10'-0"	L6 X 3 1/2 X 3/8
16'-0" @ GARAGE DOORS (no story above)	L8 X 3 1/2 X 5/8

Note: All Linlels to be Long Leg Vertical (LLV), U.N.O.

NOTES:
1. Linlel steel shall be per ASTM A36.
2. Linlels shall bear 6" min. in masonry at each end.
3. Linlels shall not be connected to wood framing, U.N.O.
4. Linlels shall be coated in accordance with local building code requirements for corrosion resistance.
5. See structural drawings for special linlels with spans greater than 10'-0 or @ garage doors w/ 2nd floor veneer above.

ENGINEERED BEAMS (PARALLAM / GLULAM)

TYPICAL BEAM SIZES (WHERE REQ'D)	SIZE SIMPSON HANGE
3.5" X 11-1/4"	HGUS412
3.5" X 11-7/8"	HGUS412
3-1/2" X 14"	HGUS414
3-1/2" X 16"	HGUS414
3-1/2" X 18"	HGUS414
5-1/4" X 11-1/4"	HGUS5.50/12
5-1/4" X 11-7/8"	HGUS5.50/12
5-1/4" X 14"	HGUS5.50/14
5-1/4" X 16"	HGUS5.50/14
5-1/4" X 18"	HGUS5.50/14
7" X 11-1/4"	HGUS7.25/12
7" X 11-7/8"	HGUS7.25/12
7" X 14"	HGUS7.25/14
7" X 16"	HGUS7.25/14
7" X 18"	HGUS7.25/14

NOTES:
1 - SAWN TIMBER - SOUTHERN YELLOW PINE SHALL BE THE GRADE SPECIFIED ON THE FRAMING DRAWINGS AND SHALL HAVE A MOISTURE CONTENT OF 15% MAXIMUM.
2 - SAWN TIMBER BEAMS USED AS HEADERS SHALL HAVE A 1/2- INCH PLYWOOD OR OSB PANEL PLACED BETWEEN THE TWO MEMBERS.
3 - PSL - PARALLAM BEAMS SHALL BE AS MANUFACTURED BY WEYERHAUSER, BOISE, IDAHO
4 - PROVIDE 3 " BEARING AT EACH END OF ANY TIMBER BEAM LISTED ABOVE, MINIMUM.
5 - HANGERS SHALL BE INSTALLED PER MANUFACTURER'S MOST REECNTLY PRINTED LITERATURE.
6 - SEE MANUFACTURER'S DETAIL SHEETS FOR TAPERED END CUTS.

DESIGN CRITERIA:

DESIGN CODE:
2012 IRC W/ CITY OF HOUSTON ADMENDMENTS

LIVE LOADS:	FLOORS	- 40 PSF
	CEILINGS	- 20 PSF
	ROOF	- 20 PSF
DEAD LOADS:		- 10 PSF
ATTIC ACCESS STAIR CAPACITY		- 350 LBS.

HANDRAIL AND GUARDRAIL DESIGN LOADS:
HANDRAILS AND GUARDRAILS SHALL SUPPORT A MINIMUM 200 LB LIVE LOAD IN ANY DIRECTION AT ANY POINT ALONG THE TOP

WIND: 110 MPH BASE WIND SPEED
3 SECOND GUST
EXPOSURE "B" HEIGHT = 30'

HEADERS:

ALL FIRST FLOOR HEADERS AND SECOND FLOOR LOAD BEARING HEADERS TO BE A MIN. OF 2 - 2 x 12 ON EDGE UNLESS NOTED OTHERWISE. 10'-0" MAX.

ALL OTHER HEADERS

2 - 2 X 4's on Edge	3'-0" MAX.
2 - 2 X 6's on Edge	4'-0" MAX.
2 - 2 X 8's on Edge	6'-0" MAX.
2 - 2 X 10's on Edge	8'-0" MAX.
2 - 2 x 12's on Edge	10'-0" MAX.

FOR REVIEW
THIS DOCUMENT IS RELEASED FOR THE PURPOSE OF PRELIMINARY REVIEW UNDER THE AUTHORITY OF KARL BRECKON, P.E. 73425 IT IS NOT TO BE USED FOR CONSTRUCTION PURPOSES.
DATE: 7/10/17

NO.	REVISION	DATE
A	ISSUED FOR REVIEW	7-10-17
B	REVISED PER CITED ANGLE AND HOOKS	7-11-17

THIS DRAWING IS THE PROPERTY OF BEC ENGINEERS AND CONSULTANTS REG # F-18690 AND MAY NOT BE REPRODUCED OR USED WITHOUT WRITTEN PERMISSION. ANY UNAUTHORIZED ALTERATION WILL VOID RESPONSIBILITY BY BEC, ITS EMPLOYEES AND REPRESENTATIVES.

BEC ENGINEERS AND CONSULTANTS, LLC
3200 Wilcrest Dr, Suite 440
Houston, Texas 77042
Ph: 832-240-3771
Fax: 832-240-2724
TBPE REGIS. #: F-18690

DRN: DW | CHKD: RG | DES: KB

REF. NO. 17-1259

JESUS PACECHO

3006 BROADMEAD
HOUSTON, TX 77025

FRAMING DETAILS, SHEATHING DETAILS AND NOTES

PLAN NO. S-5

DocuSign Envelope ID: F70BFD98-70CC-45F9-BE0D-B99B1EC1ABC3

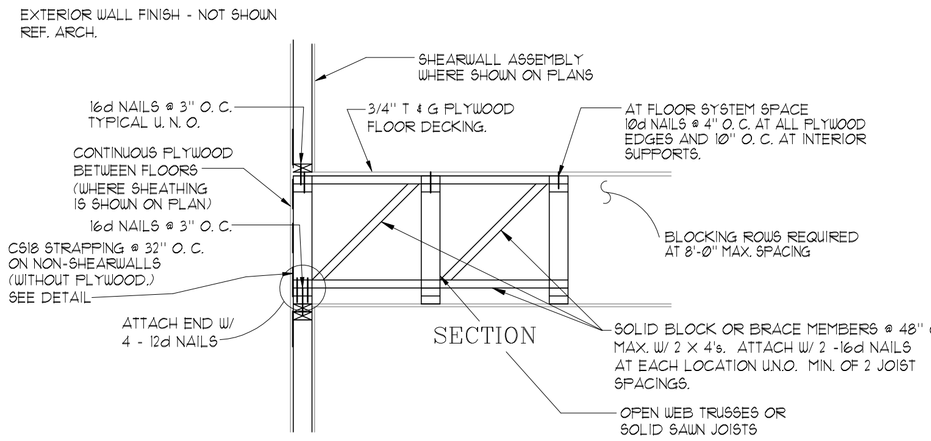

1 TYPICAL PERIMETER WALL FLOOR-TO-FLOOR CONNECTION FOR WALLS RUNNING PARALLEL TO FLOOR MEMBERS

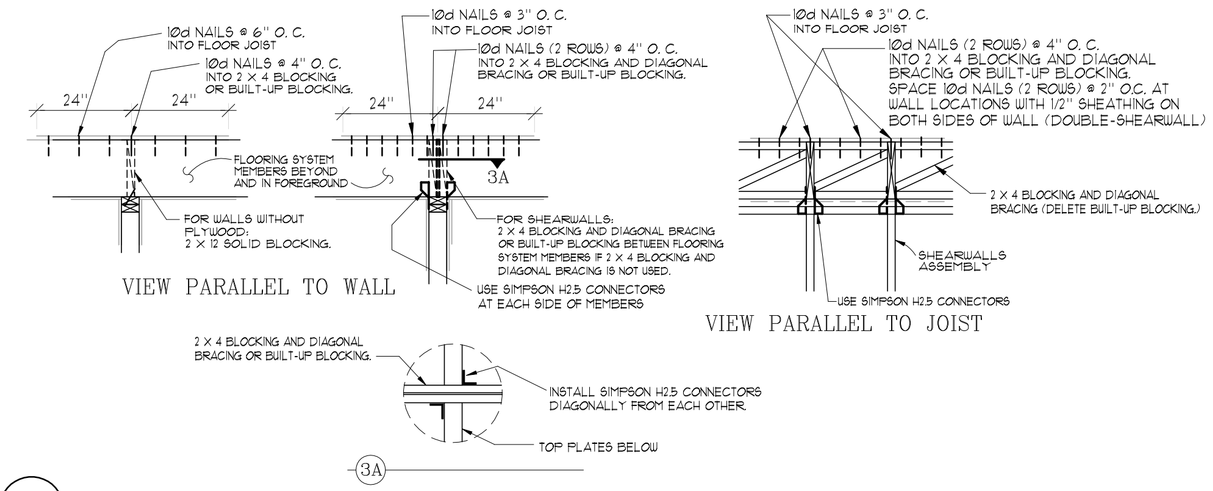

2 WALL AND SHEARWALL CONNECTION TO PERPENDICULAR FLOORING SYSTEM MEMBERS

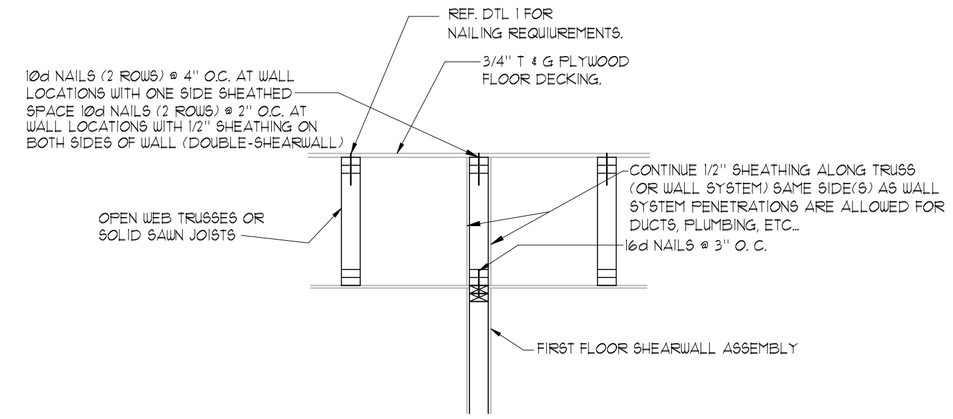

3 TYPICAL INTERIOR SHEARWALL DIRECTLY BELOW TRUSS FOR WALLS RUNNING PARALLEL TO FLOOR MEMBERS

(PLACE TRUSS DIRECTLY ABOVE SHEARWALLS WHERE POSSIBLE, OTHERWISE CONTINUE WALL SYSTEM UP TO 2ND FLOOR DECKING)

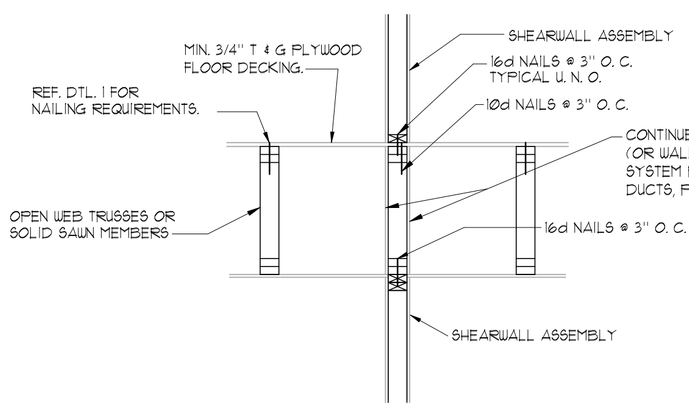

4 TYPICAL FLOOR MEMBERS DIRECTLY BETWEEN FLOOR TO FLOOR SHEARWALLS FOR WALLS RUNNING PARALLEL TO FLOOR MEMBERS

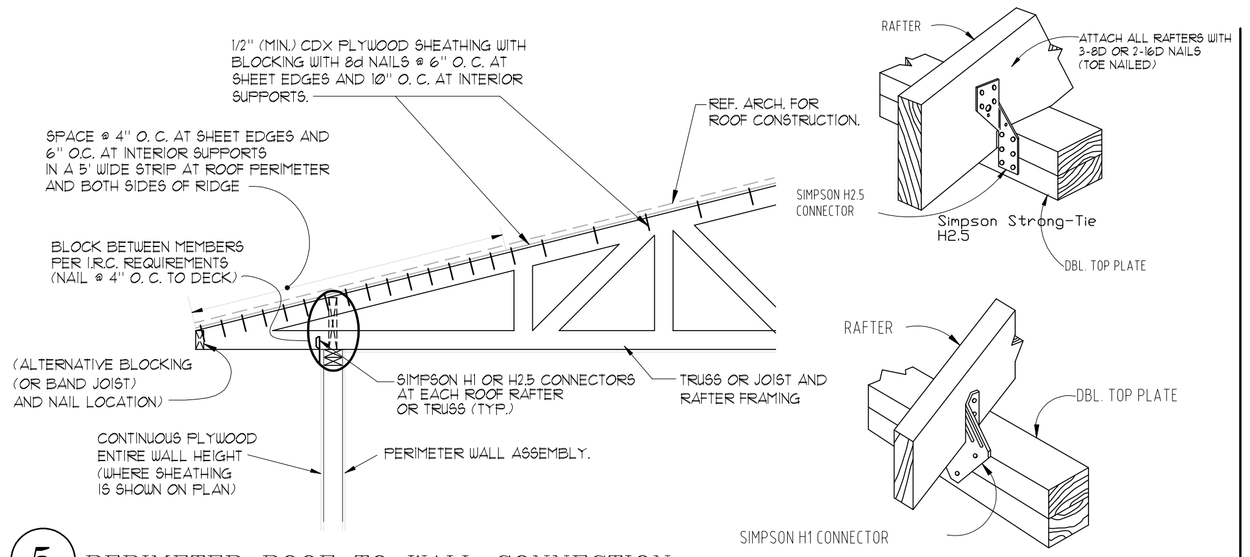

5 PERIMETER ROOF TO WALL CONNECTION

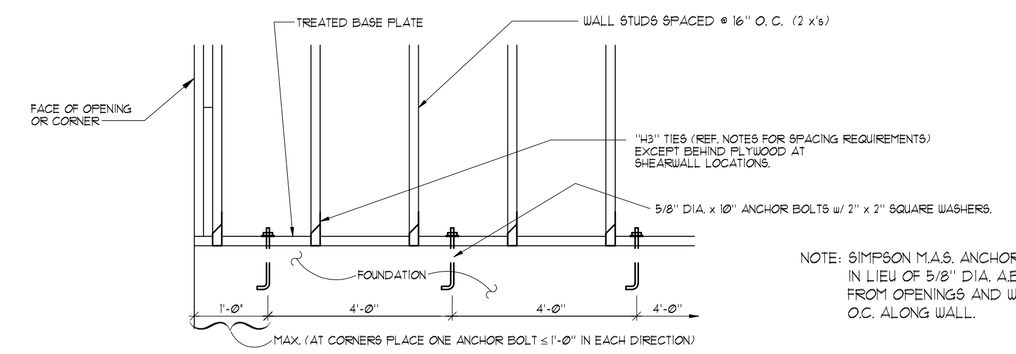

NOTE: SIMPSON M.A.S. ANCHORS MAY BE USED IN LIEU OF 5/8" DIA. A.B. SPACED 6" MAX FROM OPENINGS AND WALL ENDS @ 2'-6" O.C. ALONG WALL.

REFERENCE 1st FLOOR SHEARWALL LAYOUT DESIGN OR FOUNDATION PLAN FOR ADDITIONAL HOLDOWNS AND ALTERNATIVE ANCHORING SYSTEM.

6 FIRST FLOOR PERIMETER WALL CONNECTION TO FOUNDATION. TYPICAL ALL WALLS.

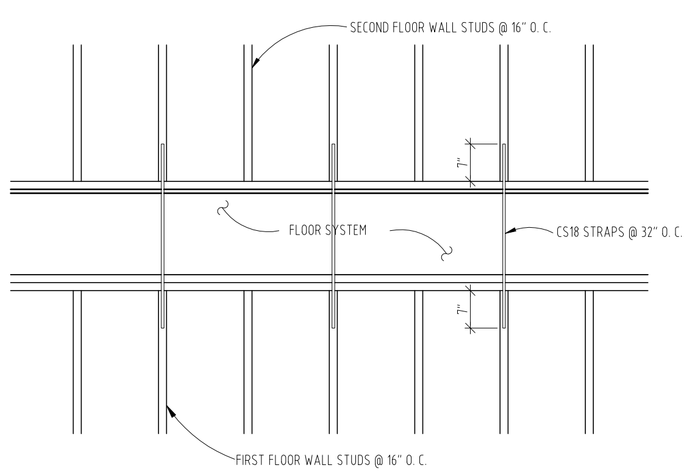

7 ALIGNED FIRST AND SECOND FLOOR EXTERIOR WALLS (UNSHEATHED WALLS)

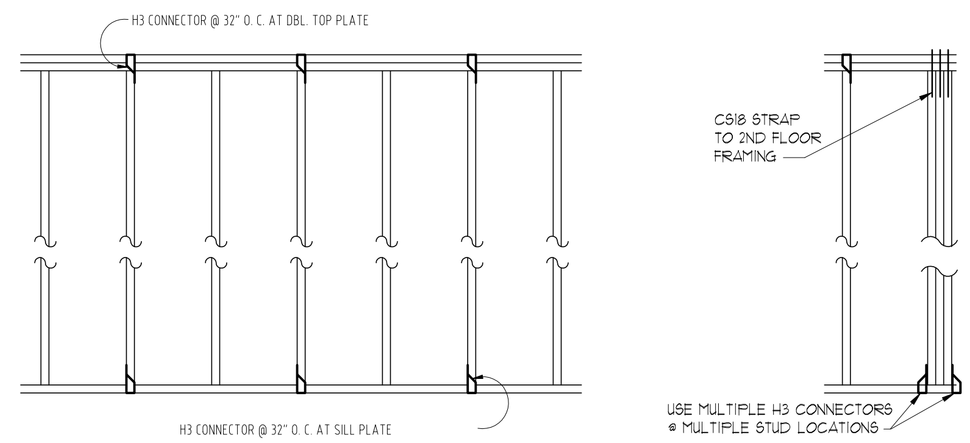

SEE SPECIFIC SHEARWALL TYPES FOR NAILING PLYWOOD, HOLD-DOWNS, LAG SCREWS, AND BOLTS. TYP. ALL DETAILS

8 TYPICAL STUD - TO - PLATE CONNECTIONS (UNSHEATHED EXTERIOR WALLS-NON PLYWOOD)

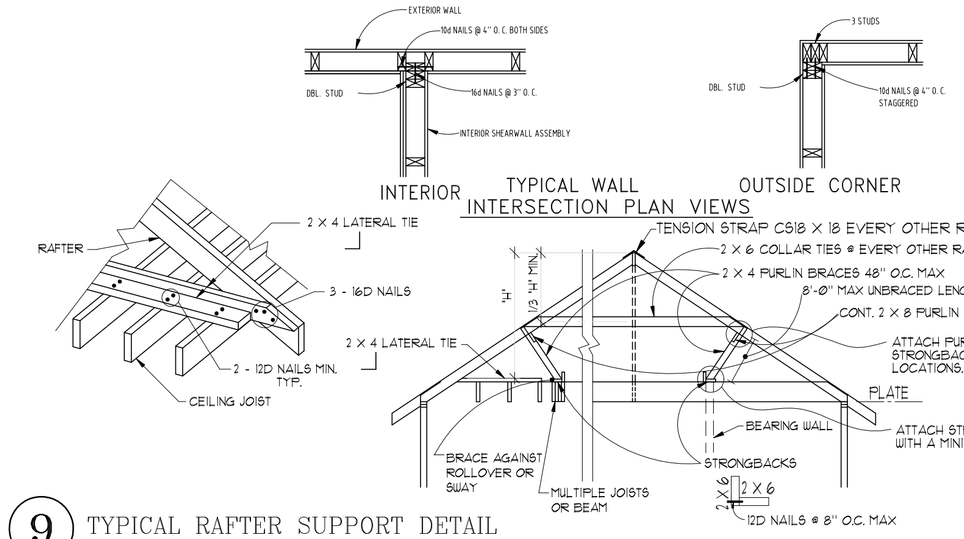

NOTE: SECURELY FASTEN HIP RIDGE & VALLEY BRACING, SUPPORT BEAMS & WALLS TO MEMBERS AT EACH END WITH H2.5 CONNECTORS (2 MIN) OR SIMPSON CS22 STRAPPING AT EACH END (WRAPPED OVER & UNDER)

9 TYPICAL RAFTER SUPPORT DETAIL

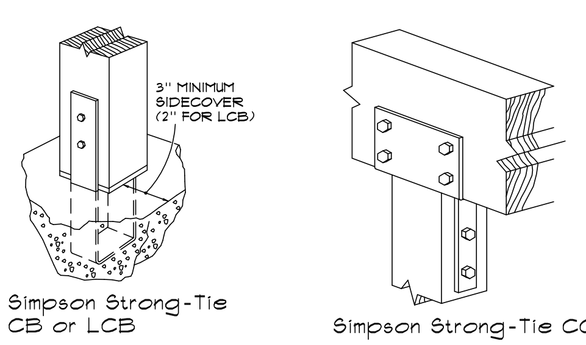

10 TYPICAL POST BASE AND CAP CONNECTIONS

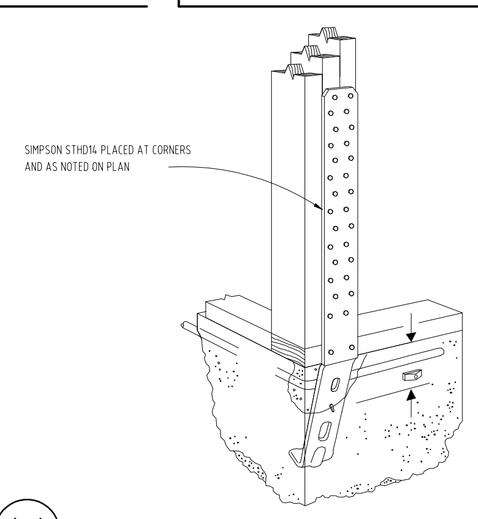

11 ANTI-SPALLING STRAP TIE HOLD-DOWN

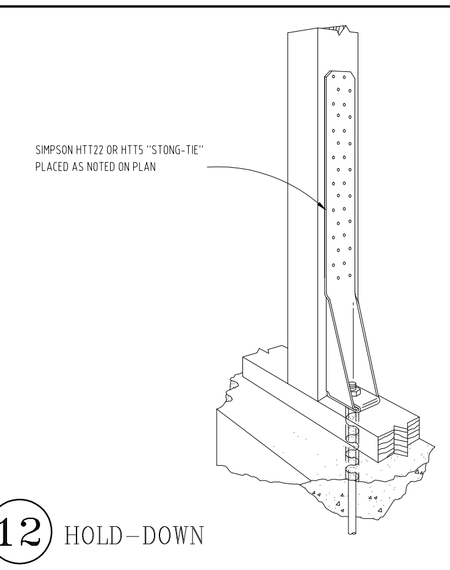

12 HOLD-DOWN

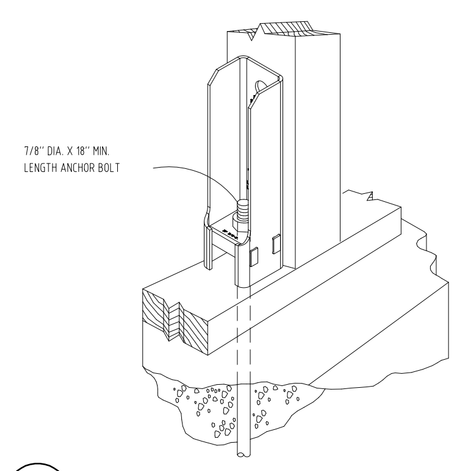

13 HD5B, HD7B AND HD9B HOLD-DOWN

SEE SPECIFIC SHEARWALL TYPES AND LAYOUT FOR NAILING PLYWOOD, HOLD-DOWNS, LAG SCREWS, OR BOLTS. TYP. ALL DTLS.

CONNECTION DETAILS

FOR REVIEW

THIS DOCUMENT IS RELEASED FOR THE PURPOSE OF PRELIMINARY REVIEW UNDER THE AUTHORITY OF KARL BRECKON, P.E. 73425 IT IS NOT TO BE USED FOR CONSTRUCTION PURPOSES.

DATE: 7/10/17

NO.	REVISION	DATE
A	ISSUED FOR REVIEW	7-10-17
B	REVISED AND UPDATED SHEARWALL NOTES	7-17-17

THIS DRAWING IS THE PROPERTY OF BEC ENGINEERS AND CONSULTANTS REG # F-18690 AND MAY NOT BE REPRODUCED OR USED WITHOUT WRITTEN PERMISSION. ANY UNAUTHORIZED ALTERATION WILL VOID RESPONSIBILITY BY BEC, ITS EMPLOYEES AND REPRESENTATIVES.

BEC ENGINEERS AND CONSULTANTS LLC
BEC ENGINEERS AND CONSULTANTS, LLC
3200 Wilcrest Dr. Suite 440
Houston, Texas 77042
Ph: 832-240-3771
Fax: 832-240-2724
TBPE REGIS. #: F-18690

DRN: DW | CHKD.: RG | DES.: KB

REF. NO. 17-1259

JESUS PACECHO

3006 BROADMEAD
HOUSTON, TX 77025

FRAMING DETAILS

FRAMING COMPONENT CONNECTIONS

PLAN NO. S-6

DocuSign Envelope ID: F70BFD88-70CC-45F9-BE6D-B598 1EC1ABC3