GENERAL NOTES:

1. THE CONTRACTOR SHALL BE RESPONSIBLE FOR THE STABILITY OF THE STRUCTURE DURING CONSTRUCTION.

2. THE BUILDER SHALL BE RESPONSIBLE FOR PROVIDING THESE NOTES AND DETAILS TO THE CONTRACTOR.

3. CONSTRUCTION SHALL CONFORM WITH THE REQUIREMENTS OF THE INTERNATIONAL RESIDENTIAL CODE FOR ONE– AND TWO–FAMILY DWELLINGS, CURRENT EDITION. THE CONTRACTOR SHALL BE RESPONSIBLE FOR DETERMINING IF ANY OTHER CODES OR ORDINANCES APPLY, AND CONFORMING TO THEM. IF A DISCREPANCY EXISTS BETWEEN THE FRAMING PLANS, DIRECTION GIVEN BY THE SUPERINTENDENT OR THESE NOTES, THE ENGINEER SHALL BE NOTIFIED IN WRITING PRIOR TO FURTHER COMMENCEMENT OF WORK.

4. ABBREVIATIONS DEFINED:
U.N.O.. – UNLESS NOTED OTHERWISE
S.P.I.B. – SOUTHERN PINE INSPECTION BUREAU
SP – SOUTHERN PINE
O.C. – ON CENTER (SPACING OF MEMBERS)
P.T. – PRESSURE TREATED
I.R.C. – INTERNATIONAL RESIDENTIAL CODE, CURRENT EDITION
– REPRESENTS CEILING JOIST HANGER

5. DESIGN MINIMUM UNIFORMLY DISTRIBUTED LIVE LOADS:
INTERIOR FLOOR – 40 PSF
ROOF – 20 PSF
ATTICS WITH STORAGE – 20 PSF
DECKS – 40 PSF
BALCONY – 60 PSF
BASIC DESIGN WIND SPEED = 90 MPH

6. MATERIALS: WOOD FRAMING MEMBERS (JOIST, RAFTERS, 2X BEAMS, BRACES, ETC.) SHALL BE NO. 2 SP U.N.O. SILL PLATES AND DECK FRAMING MEMBERS SHALL BE P.T. NO.2 SP.

7. ALL WOOD FRAMING MEMBERS SHALL BE FREE OF WARPS, CHECKS, EXCESSIVE KNOTS, CRACKS, ETC. AND SHALL CONFORM TO THE REQUIREMENTS OF THE S.P.I.B.

WALLS:

8. WALL CONSTRUCTION: 2x4 STUDS SHALL BE USED FOR WALLS LESS THAN 14 FEET IN HEIGHT AND 2x6 STUDS SHALL BE USED FOR WALLS 14–FEET TO 20–FEET IN HEIGHT.

STUDS SHALL BE SPACED AT A MAXIMUM OF 16" O.C. U.N.O. AND SHALL BE A MINIMUM NO. 2, STANDARD OR STUD GRADE LUMBER. CAP WALLS WITH DOUBLE TOP PLATE, OVERLAPPED AT CORNERS AND INTERSECTIONS. END JOINTS IN TOP PLATES SHALL BE OFFSET AT LEAST 24".

FIRST FLOOR WALLS SUPPORTING THIRD FLOOR SHALL BE FRAMED WITH 2x6 STUDS @ 16" O.C. FOR WALLS WHICH ARE NOT ATTACHED TO EITHER CEILING JOISTS OR FLOOR JOISTS, PROVIDE FLAT 2x4 BLOCKS ATTACHED TO CEILING JOISTS AND WALL TOP PLATE AT 24" O.C. TO BRACE TOP OF WALL.

WALL COLUMNS MADE UP OF MULTIPLE STUDS, FOR SUPPORT OF BEAMS AND OTHER POINT LOADS, SHALL BE CONTINUOUS FROM SECOND FLOOR WALLS TO FOUNDATION WHERE POSSIBLE. THE NUMBER OF WALL STUDS REQUIRED TO SUPPORT THE ENDS OF BEAMS SHALL BE ONE GREATER THAN THE NUMBER OF PLIES MAKING UP THE BEAM. FOR EXAMPLE: A THREE–PLY LVL (3–14" LVL) WILL REQUIRE 4 STUDS.

STUDS THAT ARE MORE THAN 10 FEET IN HEIGHT SHALL HAVE HORIZONTAL BLOCKING PROVIDED AT THEIR MID–HEIGHT.

BEAMS:

9. BEAMS IDENTIFIED AS LVL'S SHALL BE 1 3/4" MICROLLAM LAMINATED VENEER LUMBER (LVL) AND SHALL CONFORM TO THE FOLLOWING DESIGN PARAMETERS:

E = 1,900,000 PSI Fb = 2,600 PSI Fv = 285 PSI

MULTI–PLY LVL BEAMS SHALL BE CONNECTED TOGETHER AS DETAILED ON THIS SHEET.

BEAMS WILL REQUIRE A TAPERED END CUT WHEN TOP OF BEAM AT BEARING PROJECTS ABOVE ROOF DECKING SURFACE. THAT IS, THE TOP CORNER OF THE BEAM WILL HAVE TO BE CUT. THE BEAM SHOULD BE MINIMALLY CUT SO AS TO FIT TIGHTLY AGAINST THE BOTTOM OF THE ROOF DECKING. THE RESULTING BEAM DEPTH LEFT AFTER THE CUT IS MADE MEASURED VERTICALLY AT THE INSIDE FACE OF WALL SHOULD BE SIX–INCHES (6"). IF THE RESULTING BEAM DEPTH IS LESS THAN THIS MINIMUM, THEN THE WALL SHALL BE FURR–OUT BENEATH THE END OF BEAM IN QUESTION TO THE EXTENT REQUIRED TO PROVIDE THE BEAM MINIMUM BEAM DEPTH AT BEARING FACE.

BEAMS WHICH TERMINATE AT A CAUFERED CEILING BREAK LINE SHALL BE SUPPORTED BY A PAIR OF RAFTERS AND JACK RAFTERS. THE JACK RAFTERS SHALL BE OF THE SAME SIZE AS THE ADJACENT RAFTERS (TYPICALLY 2X8'S) AND SHALL FIT TIGHT AGAINST BOTTOM OF BEAM AND TOP OF WALL TOP PLATE. THE TOP OF THE JACK RAFTERS SHALL BE CUT LEVEL TO PROVIDE A BEARING SURFACE FOR THE BEAM AND SHALL BE NAILED TO THE ADJACENT RAFTER AND JACK RAFTER WITH A MINIMUM OF 14 – 12d NAILS. A RAFTER SHALL BE PROVIDED ON BOTH SIDES OF THE BUILT–UP BEAM, THEREBY "SANDWICHING" THE BEAM. THE EXTRA RAFTER PROVIDED HERE MAY BE TERMINATED AT THE FIRST SUPPORT POINT PRESENT ABOVE THE BEAM (PURLIN, HIP, ETC.). THE BEAM SHALL BE CONNECTED TO THE ADJOINING RAFTER WITH A MINIMUM OF 8 – 12d NAILS.

CEILING JOISTS:

10. ALL CEILING JOISTS AND RAFTERS SHALL BE 2x6's SPACED AT 24" O.C. U.N.O. THE CONTRACTOR SHALL USE THE FOLLOWING CEILING JOIST AND RAFTER SPAN TABLES TO VERIFY THAT THESE MEMBERS HAVE NOT EXCEEDED THE ALLOWABLE SPANS SPECIFIED.

CEILING JOISTS AND RAFTERS SHALL BEAR A MINIMUM OF 1 1/2" AT ALL SUPPORTS. LOOSE ENDS OF JOIST SHALL BE BRACED WITH A CONTINUOUS 1x4 RAT RUN.

2x6 STRONG BACKS SHALL BE PROVIDED AT THE MID–SPAN OF ALL JOIST SPANNING MORE THAN 7'–0". THE STRONG–BACK SHALL BE BUILT WITH A 2x6 VERTICAL MEMBER AND EITHER A FLAT 2x4 MEMBER OR 10" LONG 2x4 VERTICAL BLOCKS CONNECTING EACH JOIST TO THE 2x6 VERTICAL STRONG–BACK.

ALL ATTIC AREAS ARE DESIGNED FOR NO ATTIC STORAGE WITH NO FUTURE ROOMS ABOVE THE CEILING.

CEILING JOISTS SUPPORTING HVAC PLATFORMS AND/OR WATER HEATERS AS WELL AS ALL ATTIC AREAS WITH DECKING BEARING ON CEILING JOISTS SHALL BE THE SIZE SPECIFIED ON THE PLAN BUT SPACED AT 12" O.C. OR DOUBLED.

ALL JOIST–BEAM AND BEAM–BEAM CONNECTIONS SHALL BE MADE WITH JOIST HANGERS (SIMPSON'S OR APPROVED EQUAL). 2"x2" LEDGERS MAY BE USED TO SUPPORT CEILING JOISTS 2x8's AND LARGER.

BRACES:

11. PROVIDE RAFTER PURLINS AT THE LOCATIONS SHOWN ON THE PLANS. BRACE THE PURLIN AT LEAST EVERY 4 FEET WHEN PURLIN IS SAME SIZE AS LARGEST RAFTER SUPPORTED.

PURLIN BRACES SHALL BE A MINIMUM OF A FULL LENGTH TEE–SHAPED BRACE MADE OF 2–2x4's REGARDLESS OF THE LENGTH.

SEE RAFTER SPLICE DETAIL ON SHEET S–2 FOR ADDITIONAL REQUIREMENTS.

PROVIDE HORIZONTAL 2x4 LATERAL BRACING AT THE MID HEIGHT OF ALL ROOF AND PURLIN BRACES WHICH EXCEED 8'–0" IN LENGTH.

PROVIDE BRACES AT INTERSECTIONS OF RIDGES, HIPS AND VALLEYS AND OTHER LOCATIONS SHOWN ON THE PLANS. THE BRACES SHALL BE A MINIMUM OF A FULL LENGTH TEE–SHAPED BRACE MADE OF 2–2x6's.

RAFTERS:

12. RAFTER TIES (COLLAR TIES) SHALL BE PROVIDED AT EVERY OTHER RAFTER. THE TIES SHALL BE APPROXIMATELY 4'–0" LONG AND LOCATED WITHIN 2'–0" OF THE RIDGE.

SPLICES IN RIDGES, HIPS, AND VALLEYS SHALL BE CONSTRUCTED AS DETAILED HEREIN AND BRACED TO WALLS OR BEAMS AS SHOWN ON THE RAFTER LAYOUT PLAN.

HIP AND VALLEY RAFTERS MAY BE RIP–CUT TO REDUCE THEIR DEPTH SO AS TO BE MADE FLUSH WITH SUPPORTED RAFTERS AT SLOPED CEILING AREAS. AS MUCH AS 30% OF THE DEPTH OF THE HIP AND VALLEY RAFTERS MAY BE REMOVED WITHIN THE SLOPED CEILING AREA.

ALL RAFTERS SHALL BE CONNECTED TO EXTERIOR WALL TOP PLATES, PATIO AND CARPORT BEAMS WITH SIMPSON H2.5 TIES OR ENGINEER APPROVED EQUAL.

GENERAL NOTES:

13. NAILING/FASTENING SHALL CONFORM WITH THE REQUIREMENTS OF I.R.C.TABLE 602.3(1) FASTENING SCHEDULE FOR STRUCTURAL MEMBERS. FLOOR DECKING SHALL BE SCREWED AND GLUED TO FLOOR FRAMING. SECOND FLOOR WALL BOTTOM PLATES SHALL BE NAILED AND GLUED TO FLOOR DECKING.

14. ALL ROOF AND FLOOR TRUSSES SHALL BE DESIGNED UNDER THE RESPONSIBLE SUPERVISION AND SEALED BY A TEXAS REGISTERED PROFESSIONAL ENGINEER OTHER THAN J. JOHNS STRUCTURAL ENGINEERS. WOOD TRUSS DESIGN SHALL CONFORM WITH THE REQUIREMENTS OF THE I.R.C., INCLUDING BUT NOT LIMITED TO SECTION R802.10. FLOOR AND ROOF TRUSSES SHALL SUPPORT ALL IMPOSED LOADS INCLUDING FLOORS, WALLS, CEILING, ROOF AND MASONRY. THE MAXIMUM SPACING OF FLOOR TRUSSES SHALL BE 24" WITH 3/4" T&G PLYWOOD FLOOR SHEATHING APPROPRIATELY RATED FOR THE APPLICATION.

15. LUMBER LENGTHS PROVIDED ARE FOR ESTIMATING PURPOSES ONLY.

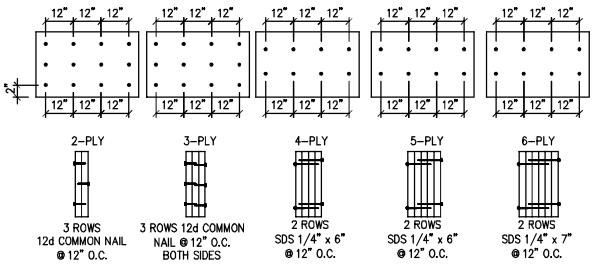

MICROLLAM LVL BEAM
MULTI–PLY CONNECTION DETAILS

10/9/2012 2:35:54 PM

RAFTERS
MAXIMUM SPAN FOR #2 SP
LIGHT ROOF COVERING CEILING
NOT ATTACHED TO RAFTERS
LL = 20 PSF, DL = 10 PSF, DEFL = L/180

RAFTER SIZE	RAFTER SPACING		
	24"	16"	12"
2 X 6	12'–3"	15'–1"	17'–0"
2 X 8	15'–10"	19'–5"	22'–5"
2 X 10	18'–11"	23'–2"	26'–0"

CEILING JOISTS
MAXIMUM SPAN FOR #2 SP
NO ATTIC STORAGE
LL = 10 PSF, DL = 5 PSF, DEFL = L/240

JOIST SIZE	JOIST SPACING		
	24"	16"	12"
2 X 6	11'–0"	13'–6"	15'–6"
2 X 8	14'–2"	17'–5"	20'–1"
2 X 10	16'–11"	20'–9"	23'–11"

STATE OF TEXAS
JOHN D. JOHNS
82219
REGISTERED PROFESSIONAL ENGINEER

J. JOHNS
STRUCTURAL ENGINEERS
STRUCTURAL DESIGN AND INSPECTION
JJOHNSPE@GMAIL.COM
(303) 999–6219

This drawing shall remain the property of the home owner and shall be used exclusively by the home owner for the construction of the new home at the address identified herein. The structural certification of this drawing will expire two years after the date of signature. Use of this drawing by any builder other than the home owner, or outside the geographic limits defined herein or after the two year expiration period will void and nullify the Engineer's seal and certification, and responsibility for the structural design will be borne by those other than the Engineer.

THE SEAL APPEARING ON THIS DOCUMENT WAS AUTHORIZED BY JOHN D. JOHNS, P.E. 82219 ON 08/27/12

SW DG SouthWest Design Group, LLC
Fredericksburg, TX
(830) 461–1180

J. JOHNS
STRUCTURAL ENGINEERS
(303) 999–6219

PHILLIPS RESIDENCE
33888 HOWELL RD, WALLER, TX 77484

REVISIONS:

NO.	DATE	BY	REVISION:
1	10/09/12	SS	DISTRIBUTION

PLAN NUMBER

DETAIL SHEETS PLANS

DO NOT SCALE DRAWINGS

SHEET # 1 OF 5

GENERAL NOTES:

18. ALL SILL PLATES SHALL BE ANCHORED TO THE FOUNDATION WITH 1/2" DIAMETER ANCHOR BOLTS SPACED AT A MAXIMUM 6'-0". WHERE ANCHORED BOLTS ARE NOT SUFFICIENTLY PRESENT POWER-ACTUATED PINS MAY BE USED. PINS SHALL BE A MINIMUM 3" LONG, 9/32" DIAMETER AND HAVE 3/4" DIAMETER WASHERS. PINS SHALL BE EMBEDDED SUFFICIENTLY IN CONCRETE TO PROVIDE FULL CONTACT OF WASHER ON SILL PLATE. PINS SHALL NOT BE SPACED MORE THAN 32" APART. THERE SHALL BE A MINIMUM OF TWO PINS PER PIECE OF SOLE PLATE, WITH ONE PIN LOCATED WITHIN 6" OF EACH END OF EACH PIECE OF SILL PLATE.

19. FIRE STOPPING SHALL CONFORM WITH THE I.R.C. SECTION R602.8.

20. ROOF DECKING SHALL BE 7/16" ORIENTED STRAND BOARD (OSB), FASTENED TO THE RAFTERS OR ROOF TRUSSES IN ACCORDANCE WITH THE I.R.C. TABLE 602.3(1). DECKING SHALL LIE ON TOP OF FASCIA BOARD. PROVIDE PLYWOOD CLIPS ON HORIZONTAL EDGES MID-WAY BETWEEN EACH RAFTER. VERTICAL JOINTS SHALL BE SUPPORTED ON FRAMING MEMBERS. DECKING JOINTS SHALL BE STAGGERED.

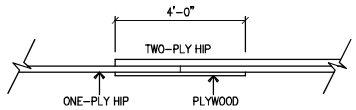

WHEN A TWO-PLY HIP RAFTER SPLICES WITH A SINGLE-PLY HIP RAFTER ALIGN THE SINGLE HIP WITH ONE OF THE TWO-PLY HIPS AND SCAB PLYWOOD TO ONE SIDE ONLY AS SHOWN IN THIS DETAIL, THEN INSTALL THE SECOND PLY OF THE TWO-PLY HIP TO THE OTHER SIDE OF THE SPLICE MAKING IT CONTINUOUS 24" PAST THE SPLICE POINT.

TWO-PLY HIP SPLICE DETAIL
NOT TO SCALE

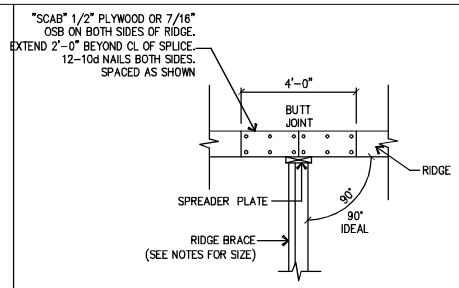

RIDGE SPLICE DETAIL
NOT TO SCALE

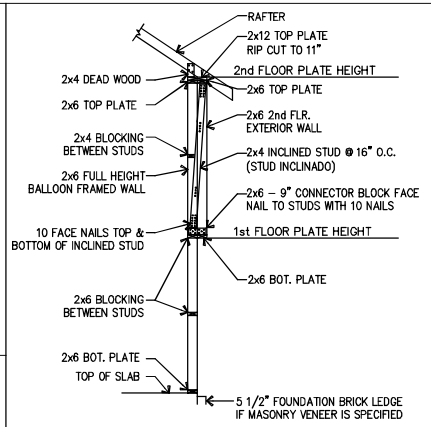

5 1/2" OFFSET WALL DETAIL
NOT TO SCALE

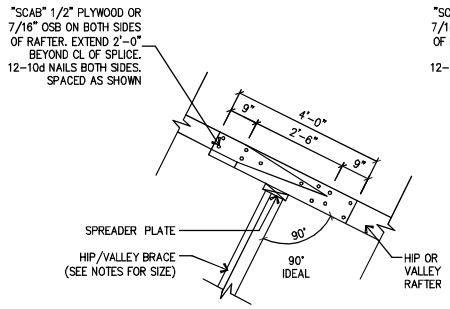

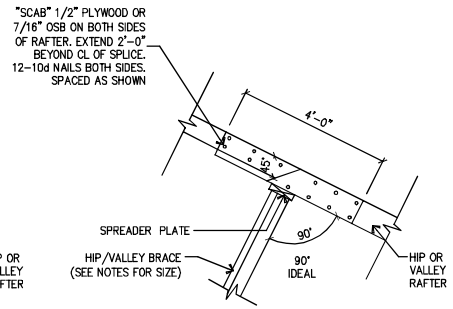

HIP AND VALLEY SPLICE DETAILS
NOT TO SCALE

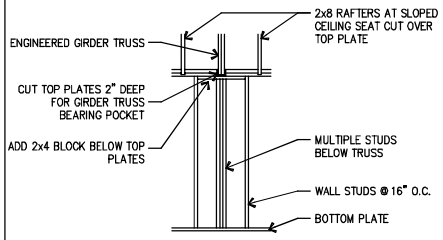

ELEVATION VIEW AT COFFERED (SLOPED) CEILING

GIRDER TRUSS DROPPED TOP PLATE POCKET
NOT TO SCALE

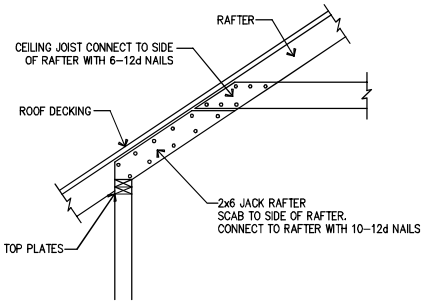

SLOPED CEILING FRAMING DETAIL
NOT TO SCALE

CROSS SECTION OF A PURLIN BRACE MADE OF 2-2x4's IN A TEE-SHAPE.

TEE-SHAPED PURLIN BRACE
NOT TO SCALE

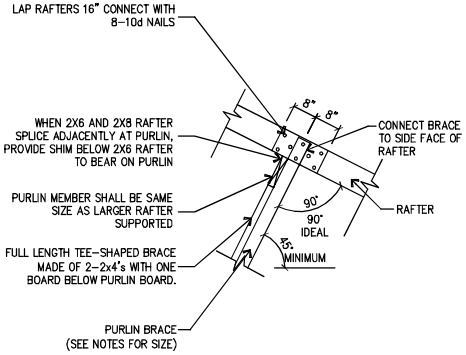

RAFTER SPLICE DETAIL
NOT TO SCALE

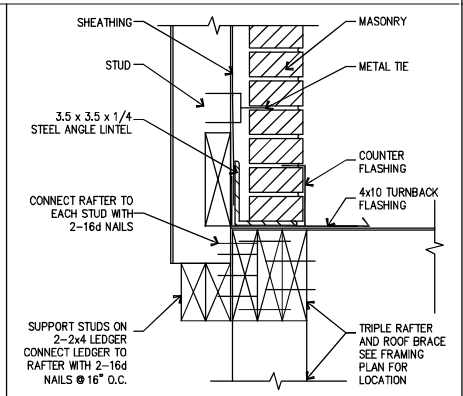

NOTE: ROOF CONSTRUCTION WITH SLOPES GREATER THAN 7:12 SHALL HAVE STOPS OF A MINIMUM 3"x3"x1/4" STEEL PLATE WELDED TO THE STEEL ANGLE LINTEL AT 24" O.C. ALONG THE ANGLE.

MASONRY SUPPORT BY ROOF MEMBERS DETAIL
NOT TO SCALE

STATE OF TEXAS
JOHN D. JOHNS
82219
REGISTERED PROFESSIONAL ENGINEER

J. JOHNS
STRUCTURAL ENGINEERS
STRUCTURAL DESIGN AND INSPECTION
JOHNSPE@GMAIL.COM
(303) 999-6219

This drawing shall remain the property of the home owner and shall be used exclusively by the home owner for the construction of the new home at the address identified herein. The structural certification of this drawing will expire two years after the date of signature. Use of this drawing by any builder other than the home owner, or outside the geographic limits defined herein or after the two year expiration period will void and nullify the Engineer's seal and certification, and responsibility for the structural design will be borne by those other than the Engineer.

THE SEAL APPEARING ON THIS DOCUMENT WAS AUTHORIZED BY JOHN D. JOHNS, P.E. 82219 ON 10/08/12

SW DG
SouthWest Design Group, LLC
Fredericksburg, TX
(830) 461-1180

J. JOHNS
STRUCTURAL ENGINEERS
(303) 999-6219

PHILLIPS RESIDENCE
33888 HOWELL RD, WALLER, TX 77484

REVISIONS:

NO.	DATE	BY	REVISION:
1	10/09/12	SS	DISTRIBUTION

PLAN NUMBER
DETAIL FRAMING SHEETS
DO NOT SCALE DRAWINGS
SHEET # 2 OF 5

10/8/2012 2:03:57 PM

CARPORT FRAMING DETAIL

COLLAR TIE BEAM SUPPORT AT RAFTERS

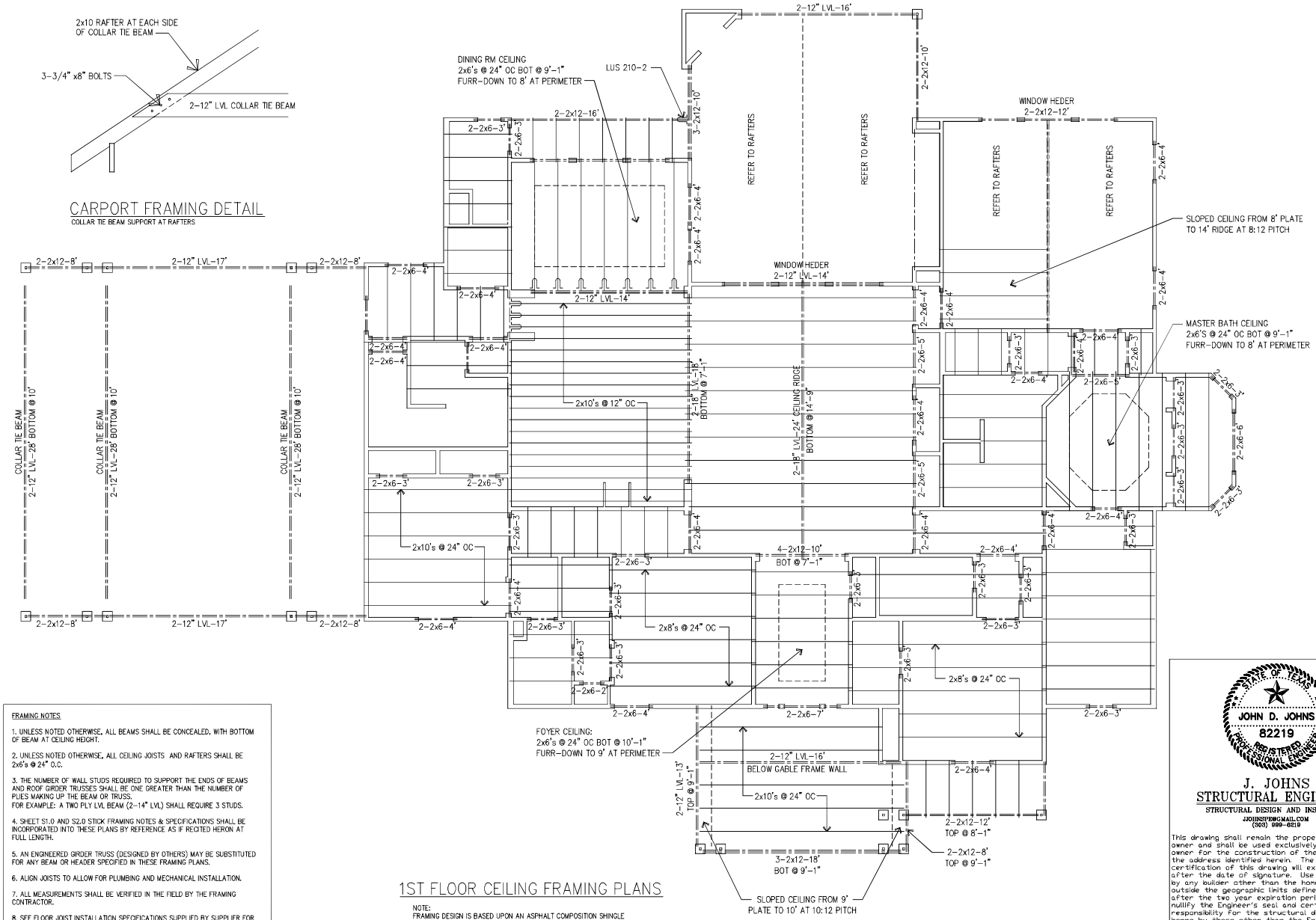

1ST FLOOR CEILING FRAMING PLANS

NOTE:
FRAMING DESIGN IS BASED UPON AN ASPHALT COMPOSITION SHINGLE ROOF COVERING. ENGINEER SHALL BE INFORMED PRIOR TO THE USE OF THESE PLANS IF A DIFFERENT ROOFING WILL BE USED.

ALL RAFTERS SHALL BE CONNECTED TO EXTERIOR WALL TOP PLATES, PATIO AND CARPORT BEAMS WITH SIMPSON H2.5 TIES OR ENGINEER APPROVED EQUAL.

FRAMING NOTES

1. UNLESS NOTED OTHERWISE, ALL BEAMS SHALL BE CONCEALED, WITH BOTTOM OF BEAM AT CEILING HEIGHT.

2. UNLESS NOTED OTHERWISE, ALL CEILING JOISTS AND RAFTERS SHALL BE 2x6's @ 24" O.C.

3. THE NUMBER OF WALL STUDS REQUIRED TO SUPPORT THE ENDS OF BEAMS AND ROOF GIRDER TRUSSES SHALL BE ONE GREATER THAN THE NUMBER OF PLIES MAKING UP THE BEAM OR TRUSS.
FOR EXAMPLE: A TWO PLY LVL BEAM (2-14" LVL) SHALL REQUIRE 3 STUDS.

4. SHEET S1.0 AND S2.0 STICK FRAMING NOTES & SPECIFICATIONS SHALL BE INCORPORATED INTO THESE PLANS BY REFERENCE AS IF RECITED HERON AT FULL LENGTH.

5. AN ENGINEERED GIRDER TRUSS (DESIGNED BY OTHERS) MAY BE SUBSTITUTED FOR ANY BEAM OR HEADER SPECIFIED IN THESE FRAMING PLANS.

6. ALIGN JOISTS TO ALLOW FOR PLUMBING AND MECHANICAL INSTALLATION.

7. ALL MEASUREMENTS SHALL BE VERIFIED IN THE FIELD BY THE FRAMING CONTRACTOR.

8. SEE FLOOR JOIST INSTALLATION SPECIFICATIONS SUPPLIED BY SUPPLIER FOR ADDITIONAL REQUIREMENTS.

10/9/2012 2:03:56 PM

STATE OF TEXAS
JOHN D. JOHNS
82219
REGISTERED PROFESSIONAL ENGINEER

J. JOHNS
STRUCTURAL ENGINEERS
STRUCTURAL DESIGN AND INSPECTION
JJOHNSTRC@GMAIL.COM
(303) 999-6219

This drawing shall remain the property of the home owner and shall be used exclusively by the home owner for the construction of the new home at the address identified herein. The structural certification of this drawing will expire two years after the date of signature. Use of this drawing by any builder other than the home owner, or outside the geographic limits defined herein or after the two year expiration period will void and nullify the Engineer's seal and certification, and responsibility for the structural design will be borne by those other than the Engineer.

THE SEAL APPEARING ON THIS DOCUMENT WAS AUTHORIZED BY JOHN D. JOHNS, P.E. 82219 ON 10/08/12

SW DG
SouthWest Design Group, LLC
Fredericksburg, TX
(830) 461-1180

J. JOHNS
STRUCTURAL ENGINEERS
(303) 999-6219

PHILLIPS RESIDENCE
33888 HOWELL RD, WALLER, TX 77484

REVISIONS:			
NO.	DATE	BY	REVISION:
1	10/09/12	SS	DISTRIBUTION

PLAN NUMBER	
CEILING FRAMING PLAN	
DO NOT SCALE DRAWINGS	SHEET # 3 OF 5

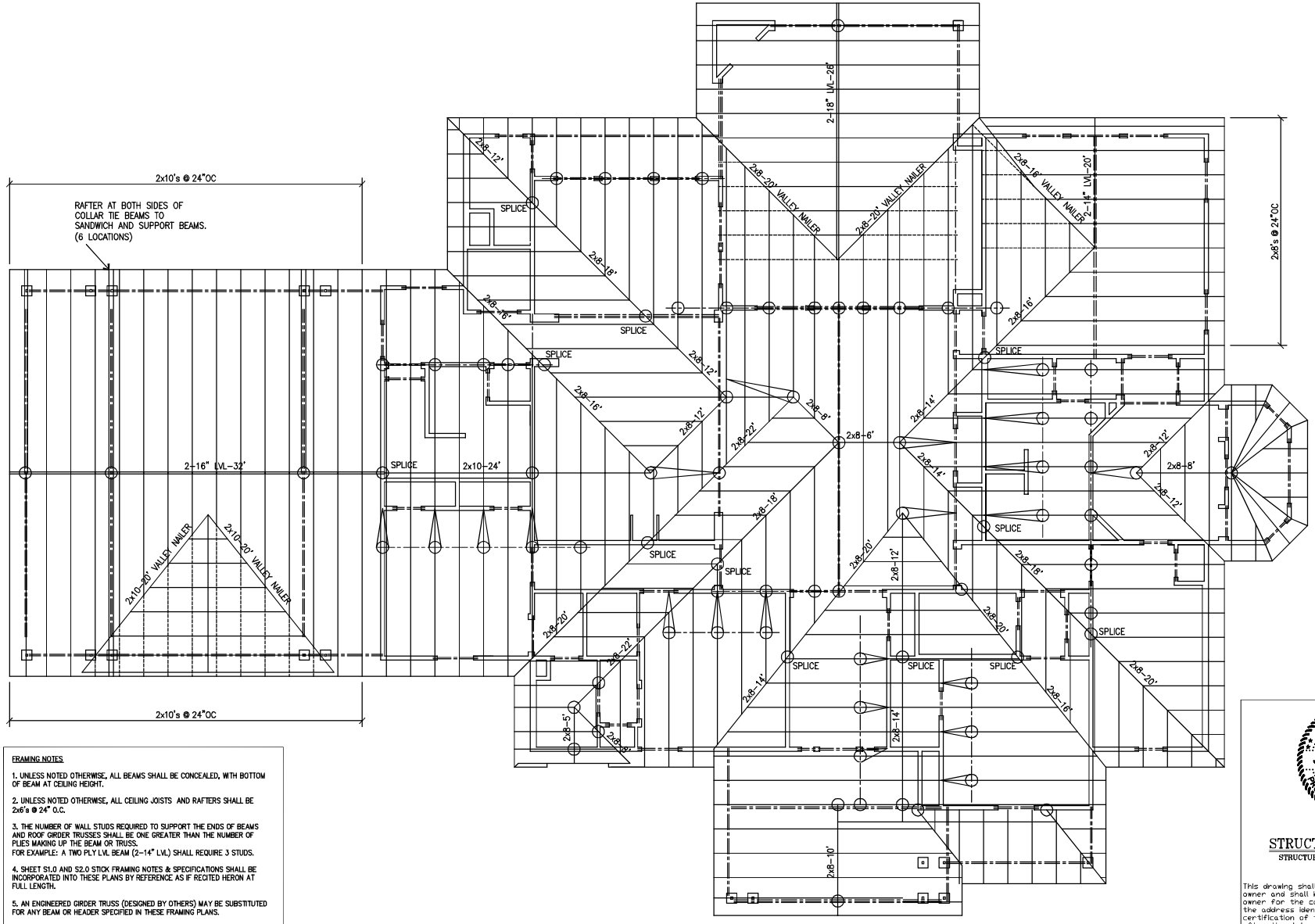

FRAMING NOTES

1. UNLESS NOTED OTHERWISE, ALL BEAMS SHALL BE CONCEALED, WITH BOTTOM OF BEAM AT CEILING HEIGHT.

2. UNLESS NOTED OTHERWISE, ALL CEILING JOISTS AND RAFTERS SHALL BE 2x6's @ 24" O.C.

3. THE NUMBER OF WALL STUDS REQUIRED TO SUPPORT THE ENDS OF BEAMS AND ROOF GIRDER TRUSSES SHALL BE ONE GREATER THAN THE NUMBER OF PLIES MAKING UP THE BEAM OR TRUSS.
FOR EXAMPLE: A TWO PLY LVL BEAM (2-14" LVL) SHALL REQUIRE 3 STUDS.

4. SHEET S1.0 AND S2.0 STICK FRAMING NOTES & SPECIFICATIONS SHALL BE INCORPORATED INTO THESE PLANS BY REFERENCE AS IF RECITED HERON AT FULL LENGTH.

5. AN ENGINEERED GIRDER TRUSS (DESIGNED BY OTHERS) MAY BE SUBSTITUTED FOR ANY BEAM OR HEADER SPECIFIED IN THESE FRAMING PLANS.

6. ALIGN JOISTS TO ALLOW FOR PLUMBING AND MECHANICAL INSTALLATION.

7. ALL MEASUREMENTS SHALL BE VERIFIED IN THE FIELD BY THE FRAMING CONTRACTOR.

8. SEE FLOOR JOIST INSTALLATION SPECIFICATIONS SUPPLIED BY SUPPLIER FOR ADDITIONAL REQUIREMENTS.

10/9/2012 2:03:56 PM

ROOF FRAMING PLANS

NOTE:
FRAMING DESIGN IS BASED UPON AN ASPHALT COMPOSITION SHINGLE ROOF COVERING. ENGINEER SHALL BE INFORMED PRIOR TO THE USE OF THESE PLANS IF A DIFFERENT ROOFING WILL BE USED.

ALL RAFTERS SHALL BE CONNECTED TO EXTERIOR WALL TOP PLATES, PATIO AND CARPORT BEAMS WITH SIMPSON H2.5 TIES OR ENGINEER APPROVED EQUAL.

STATE OF TEXAS
JOHN D. JOHNS
82219
REGISTERED PROFESSIONAL ENGINEER

J. JOHNS
STRUCTURAL ENGINEERS
STRUCTURAL DESIGN AND INSPECTION
JJOHNSPE@GMAIL.COM
(303) 999-6219

This drawing shall remain the property of the home owner and shall be used exclusively by the home owner for the construction of the new home at the address identified herein. The structural certification of this drawing will expire two years after the date of signature. Use of this drawing by any builder other than the home owner, or outside the geographic limits defined herein or after the two year expiration period will void and nullify the Engineer's seal and certification, and responsibility for the structural design will be borne by those other than the Engineer.

THE SEAL APPEARING ON THIS DOCUMENT WAS AUTHORIZED BY JOHN D. JOHNS, P.E. 82219 ON 10/08/12

SW DG
SouthWest Design Group, LLC
Fredericksburg, TX
(830) 461-1180

J. JOHNS
STRUCTURAL ENGINEERS
(303) 999-6219

PHILLIPS RESIDENCE
33888 HOWELL RD, WALLER, TX 77484

REVISIONS:

NO.	DATE	BY	REVISION:
1	06/26/2012	SS	DISTRIBUTION

PLAN NUMBER

ROOF FRAMING PLAN

DO NOT SCALE DRAWINGS

SHEET # 4 OF 5

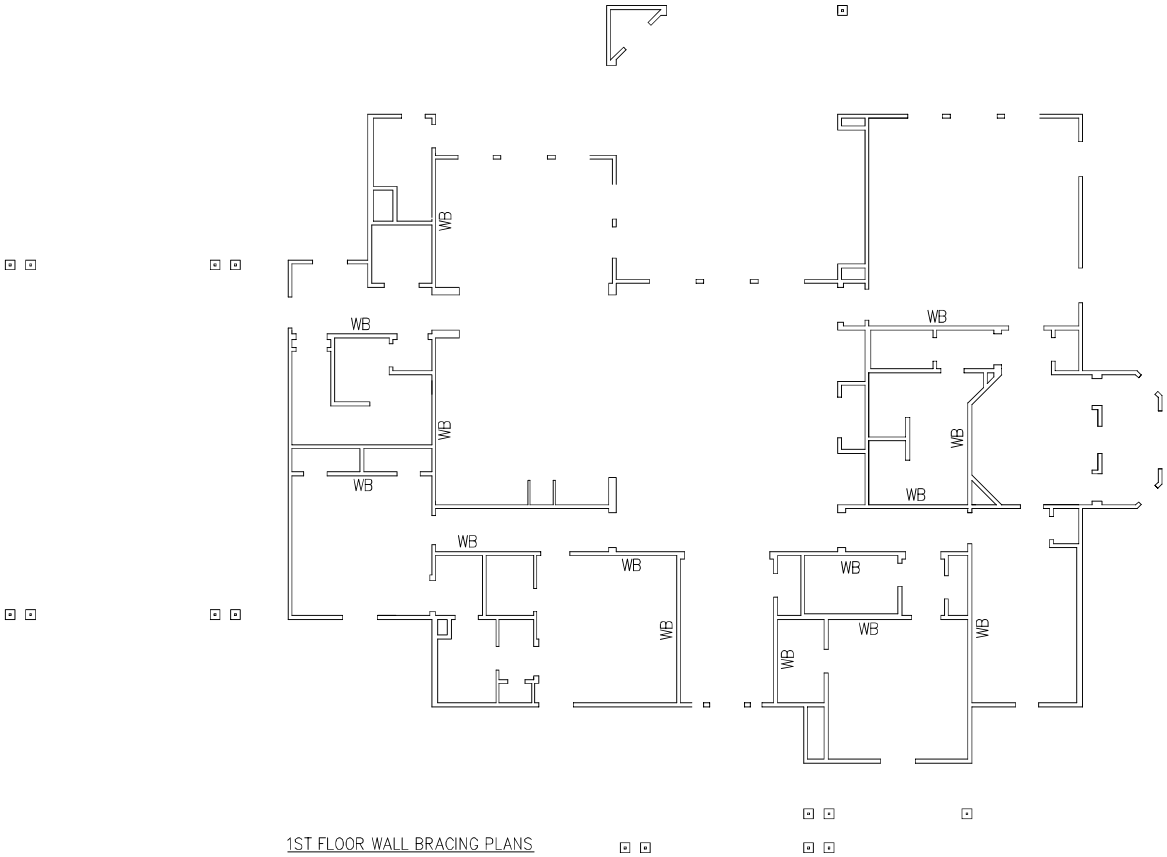

1ST FLOOR WALL BRACING PLANS

LEGEND

WB	1X4 LET-IN OR SIMPSON CWB OR TWO SIMPSON WB FLAT STRAPS

WALL BRACING NOTES

1) SHEATH ALL EXTERIOR WALLS WITH 7/16" OSB. FASTEN OSB TO FRAMING WITH ONE OF THE FOLLOWING MINIMUM FASTENERS: 6d COMMON NAILS OR 15 GAUGE 1 1/2" STAPLE OF 16 GAUGE 1 3/4" STAPLE SPACED 6" O.C. ON ALL PANEL EDGES AND 12" O.C. ON INTERMEDIATE SUPPORTS.

2) ALL VERTICAL JOINTS OF PANEL SHEATHING SHALL OCCUR OVER STUDS. BLOCK ALL HORIZONTAL JOINTS.

3) OSB WALL SHEATHING SHALL BE COVERED BY AN APPROVED WATER-REPELLENT SHEATHING.

5) WHERE 1x4 LET-IN BRACE IS USED FOR WALL BRACING, IT SHALL BE SET INTO THE TOP AND BOTTOM PLATES AND THE INTERVENING STUDS, PLACED AT NOT MORE THAN 60 DEGREES OR LESS THAN 45 DEGREES FROM THE HORIZONTAL AND ATTACHED TO EACH STUD AND PLATE WITH A MINUMUM OF 2-8d NAILS.

STATE OF TEXAS
JOHN D. JOHNS
82219
REGISTERED
PROFESSIONAL ENGINEER

J. JOHNS
STRUCTURAL ENGINEERS
STRUCTURAL DESIGN AND INSPECTION
JOHNSPE@GMAIL.COM
(303) 999-6219

This drawing shall remain the property of the home owner and shall be used exclusively by the home owner for the construction of the new home at the address identified herein. The structural certification of this drawing will expire two years after the date of signature. Use of this drawing by any builder other than the home owner, or outside the geographic limits defined herein or after the two year expiration period will void and nullify the Engineer's seal and certification, and responsibility for the structural design will be borne by those other than the Engineer.

THE SEAL APPEARING ON THIS DOCUMENT WAS AUTHORIZED BY JOHN D. JOHNS, P.E. 82219 ON 10/08/12

SW DG
SouthWest Design Group, LLC
Fredericksburg, TX
(830) 461-1180

J. JOHNS
STRUCTURAL ENGINEERS
(303) 999-6219

PHILLIPS RESIDENCE
33888 HOWELL RD, WALLER, TX 77484

REVISIONS:

NO.	DATE	BY	REVISION:
1	10/09/12	SS	DISTRIBUTION

PLAN NUMBER
WALL BRACING PLANS

DO NOT SCALE DRAWINGS

SHEET # 5 OF 5

10/9/2012 2:04:00 PM